NO. 56 NOTES FROM THE SHOP $3.50

Woodsmith®

VERSATILE
COMPUTER FURNITURE

PLUS: A STURDY KID'S TABLE AND CHAIR SET

Woodsmith®

Number 56 **April, 1988**

Editor **Donald B. Peschke**
Design Director **Ted Kralicek**
Managing Editor **Douglas L. Hicks**
Assistant Editor **Douglas M. Lidster**
Project Designer **Ken Munkel**
Technical Illustrators **David Kreyling**, **Cary Christensen**, **Rod Stoakes**, **Chris Glowacki**
Customer Service **Sandy Baum, Mgr.**, **Vicky Robinson**, **Jackie Stroud**, **Pat Koob**
Computer Operations **Ken Miner**
Administrative Assts. **Cheryl Scott**, **Jean Carey**
Building Maintenance **Archie Krause**

The Woodsmith Store

Operations **Steve Krohmer**
Marketing Manager **Steve Dozier**
Administrative Asst. **Christel Miner**
Store Managers:
St. Louis, MO **Jon Behrle**
Berkeley, CA **Michael DeHaven**
Des Moines, IA **Kent Welsh**

WOODSMITH (ISSN 0164-4114) is published bimonthly (February, April, June, August, October, December) by Woodsmith Publishing Co., 2200 Grand Ave., Des Moines, IA 50312.
Woodsmith is a registered trademark of Woodsmith Publishing Co.

©**Copyright 1988** by Woodsmith Publishing Co. All Rights Reserved.

Subscriptions: One year (6 issues) $12.95, Two Years (12 issues) $22.95. Canada and Foreign: add $2 per year, U.S. funds only. Single copy price, $3.50.
Second Class Postage Paid at Des Moines, Iowa.
Postmaster: Send change of address notice, to Woodsmith Publishing Co., 2200 Grand Ave., Des Moines, IA 50312.
BACK ISSUES: All back issues of *Woodsmith* are still available. For a free booklet describing the contents and prices of all back issues, just send us your name and address to the address above.
SAMPLE COPY: We will be happy to send a free sample copy of *Woodsmith* to anyone you think would enjoy it. Just send us his/her name and address.

Sawdust

ABOUT THIS ISSUE. There's a woodworking technique that's not talked about much. Most of the time it's ignored as a legitimate way to join two pieces of wood. Indeed, most woodworkers go to great lengths to avoid using this technique, preferring more traditional methods.

What's the technique? Using woodscrews. Okay, it's not a big surprise. But you have to admit that screws don't receive the attention of joints like dovetails or mortise and tenon. They really don't even rank up there with dowels.

We used woodscrews extensively for the projects in this issue. In fact, if you look back, we've actually used them quite a bit on all sorts of projects. So we thought it was time to get down to the details of exactly what kind of screws we use, and how we use them.

TYPES OF SCREWS. The article on pages 20 to 21 describes a variety of screws that can be used for woodworking. The main point is that we've used the basic woodscrew in most of the past issues. That is, we've shown the type of screw that has a slotted flat head, smooth (unthreaded) shank, and a spiral threaded section.

But recently we've begun to switch over to particle board screws (a close cousin of drywall screws). Among other things, these screws have a "Lo-Root" shank, and the threads are deeper, sharper and at a steeper angle. Also, instead of the typical slotted head, the screws we've chosen have a Robertson square- drive head.

HISTORY. It would be easy to assume that the use of woodscrews is a relatively recent phenomenon — a short-cut for the modern woodworker. Actually, woodscrews came into popular use around the turn of the twentieth century.

It was then that many craftsmen decided that woodscrews were the salvation of the furniture industry. Out went the old joinery methods, to be replaced by metal screws.

Unfortunately, when they threw out the old joinery methods, they seemed to throw out the reasons behind these methods, too. As a result, the joinery that employed screws on the furniture of this period has failed. And screws have gotten a bad reputation. However, the problem was not that screws were used for joinery, but that they were not used properly.

MECHANICAL JOINTS. Screws fall into a basic category of mechanical fasteners, which includes nails and dowels. Although screws and dowels are both mechanical fasteners, they're not used the same way.

When dowels are used to join two pieces of wood, they're joined (glued) to *both* pieces. That is, both ends of the dowel are glued into matching holes in both pieces of wood. The dowel is sort of a bonded link that holds the pieces together.

Screws, on the other hand, are actually clamps. When joining two pieces of wood, the threads of the screw only "grab" the second (anchor) board. The first (top) board is simply held down by the head of the screw.

Okay, enough theory. The point is that I generally think of screws as spot clamps used in conjunction with glue. When joining two pieces of wood with glue and screws, the glue creates the actual bond. The screws are clamps that hold the pieces together until the glue dries.

The bottom line is this: If you're trying to decide between using dowels or screws, I would choose screws in most cases. Screws (and glue) provide a much more positive joint than dowels (and glue) because of the clamping action of the screws.

COMPUTER FURNITURE. As we began to design the computer furniture in this issue, it was interesting to see how a computer desk varied from "standard" furniture. The height of a standard desk is designed for comfort and efficiency for *writing* (and shuffling papers). Although it varies a little, the height of most desks is between 29″ and 30″.

However, when designing the computer desk, it had to be an efficient height for a keyboard (the computer's "pencil"). So we converted the center drawer of the desk (the pencil drawer) to a pull-out keyboard drawer. This also worked out nicely because we could keep the desk height at the standard 29″ while at the same time lowering the keyboard drawer to a comfortable typing height.

KID'S FURNITURE. I thought I should mention one thing about the Kid's Table and Chairs shown in this issue. These pieces are sized for kids from about 2 years old to 7 years old. To build a larger set for older (bigger) children (6 to 10 years old), scale up the seat height of the chair and the surface height of the table so they're about 2″ higher.

One other thing. Projects like this have a limited useful life — which is another way of saying, kids grow. So we used knock-down connectors to assemble the major components of these projects. This way, as the kids grow out of them, they can be knocked down and stored to await the next generation. Or, shipped to other members of the family.

NEXT MAILING. The next issue of *Woodsmith*, (No. 57) will be mailed during the week of July 11, 1988.

Tips & Techniques

SET-UP GAUGE

When I built the schoolhouse clock shown in *Woodsmith* No. 21, I discovered the importance of an accurate table saw set-up. The clock has an octagonal front frame. To make all the joints fit tight, the ends of each piece have to be precisely mitered at 67½°. (This is a setting of 22½° on some miter gauges.)

It took me quite a while to get the perfect set-up. When I finally got it, I cut a set-up gauge in case I ever wanted to cut the angle again.

I cut the gauge from a scrap of ⅛" Masonite that measured about 9" x 12", see inset in drawing. After cutting off one corner (at 67½° in my case), I set the saw at precisely 45° and cut off another corner to use when setting that angle.

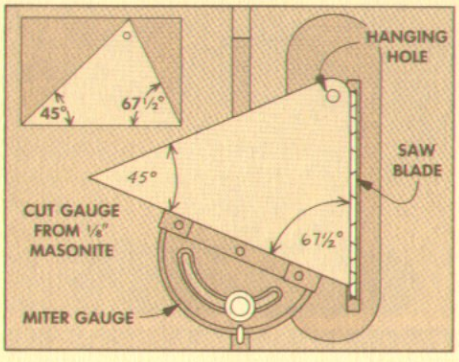

After cutting the angles you want, clearly mark the corners with arcs so you know immediately which corner to use when cutting a specific angle. The ends of the arc always point to the miter gauge and the saw blade.

By marking the *other* side of the gauge, you can flip it over to set up the miter gauge when it's in the opposite slot. Finally, drill a hole in one corner of the gauge to hang it near your saw.

Now, whenever I make an angle cut, I don't pay attention to the rough scale on the miter gauge. I just reach for the correct set-up gauge. When I have to set up a new angle, I take an extra minute and make a new gauge for the next time.

Dave Rath
Elmhurst, Illinois

WORKING IDENTICAL PIECES

When cutting two identical pieces on a band saw, I find it easiest to fasten the pieces together and then saw them out together. I have fastened them with nails, double-sided carpet tape, and hot glue.

Each method has its advantages, and disadvantages. Nails can split the wood. As for tape and glue, it's difficult to clean the residue from the finished product.

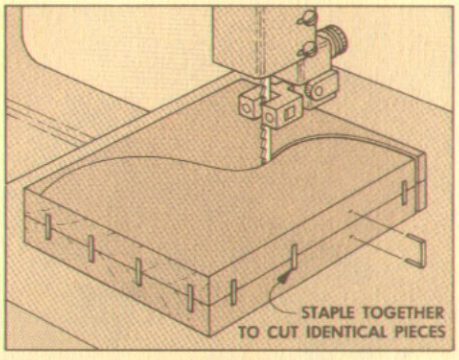

Recently, I've started using staples from my staple gun. I drive staples into the end grain, waste area, and other areas that will be covered during final assembly. Just don't drive any staples where you will be cutting.

To get both pieces *exactly* the same size and shape, don't remove the staples until after the cut edge has been final sanded.

Harold Stalder
State College, Pennsylvania

CENTER-FINDING CIRCLE TEMPLATE

When band or jig sawing an interior contour, some of the radii can be more accurately bored out before sawing. One of the problems of using this approach is finding the center point for the drill. Drafting circle templates show the outside circumference, but not the centerpoint.

To solve that problem, I made a template out of ⅛"-thick clear Plexiglas. First, cover the Plexiglas with masking tape and lay out the hole sizes desired with a compass. Then lightly punch the center point of each circle with an awl and strip off the masking tape.

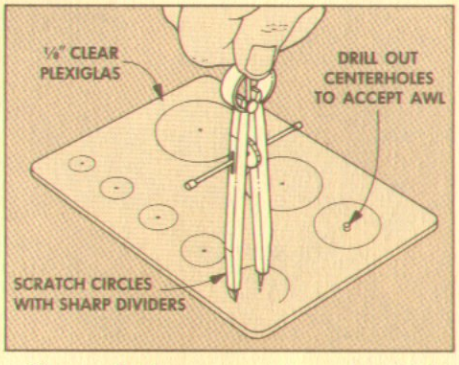

Using dividers, scratch each of the desired holes in the Plexiglas to a depth of several thousandths of an inch. The divider points should be very sharp and the engraving should be done by a number of passes instead of trying to do it in one or two passes.

After all the holes are engraved, drill the center holes large enough so that your scratch awl extends about 1/16" through the template. Then work some black paint (I used model enamel) into the grooves so they can easily be seen.

To use the template, select the hole size that corresponds as closely as possible with the contour of the cutout. Lay the template on the workpiece and align the circumference of the selected hole with the contour. Then mark the center and drill the hole.

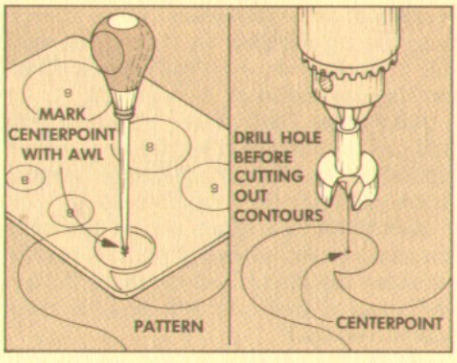

This template is useful anytime you know the *outside* circumference of a hole, but not the centerpoint. It's also handy for finding the center of dowels.

John C. Walter
Columbus, Indiana

Editor's Note: I made one of John's templates, and find it useful. When making it I engraved the first couple circles with dividers, but found it hard to hold the dividers steady and scratch deep enough. For the rest, I switched to a Forstner bit mounted in a drill press. Spin it by hand just until the rim scratches the Plexiglas and produces the circle, but stop before the lifter starts cutting.

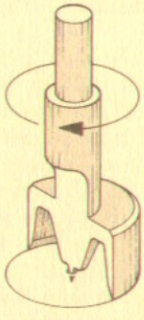

SEND IN YOUR IDEAS

If you'd like to share a woodworking tip with other readers of *Woodsmith*, send your idea to: *Woodsmith*, Tips & Techniques, 2200 Grand Ave., Des Moines, Iowa 50312.

We pay a minimum of $10 for tips, and $15 or more for special techniques (that are accepted for publication). Please give a complete explanation of your idea. If a sketch is needed, send it along; we'll draw a new one.

Kid's Chairs

KID'S STUFF

Building a table and chair set is usually a difficult procedure. Traditional design calls for joining curved and angled parts with many variations of mortise and tenon or dowel joints.

We came up with a less taxing technique for this kid's table and chair set. It uses straight cuts and lap joints.

CHAIR SIDE FRAMES

I started by making the chairs. (The table is shown in the next article.) Each chair consists of two side frames. Begin by ripping the leg uprights (A,B) and the rails (C) 2" wide from 4/4 (13/16") stock. Then cut them to length as shown in Fig. 1.

HALF LAPS. These pieces are joined with half-laps to form the side frames. I started by cutting end laps at the three corners where the rails meet the uprights.

SHOULDER CUT. When cutting half-laps, the shoulder cut is made first. This cut determines the length and depth of the lap and ensures that you will have a clean square shoulder.

SHOULDER LENGTH. To set up the cut, lock the rip fence in place so the distance from the fence to the *outside* of the blade equals the width of the stock being lapped (2" in this case), see Fig. 2.

BLADE HEIGHT. Next, the blade height is set to cut half way through the stock. When making the cheek cut, the blade will cut into this kerf and leave a square corner.

MAKE SHOULDER CUTS. When the saw is set up, make the shoulder cuts on both ends of the front uprights (B) and the rails (C), but on only one end (the bottom end) of the back uprights (A).

Shop Note. It's tempting at this point to form the lap joints by continuing to make multiple passes over the saw blade. (This is how I usually form tenons.) But the saw blade will leave a series of score marks that will be visible at the edges of the finished joint. Instead, I used a tenon jig.

CHEEK CUT. The cheek cut determines the finished thickness of the lap joint. To make this cut, I used a tenon jig that slides over the top of the table saw fence, see Fig. 3. (For details on how to build this tenon jig, see *Woodsmith* No. 24.)

First, set the height of the sawblade so it cuts into the kerf of the shoulder cut. Then adjust the tenon jig (by moving the fence in and out) to set the thickness of the lap. Now cut the ends of two scrap pieces and hold them together to check the accuracy of the cut. When they meet perfectly, make the cheek cuts on the chair rails and uprights.

FIGURE 1

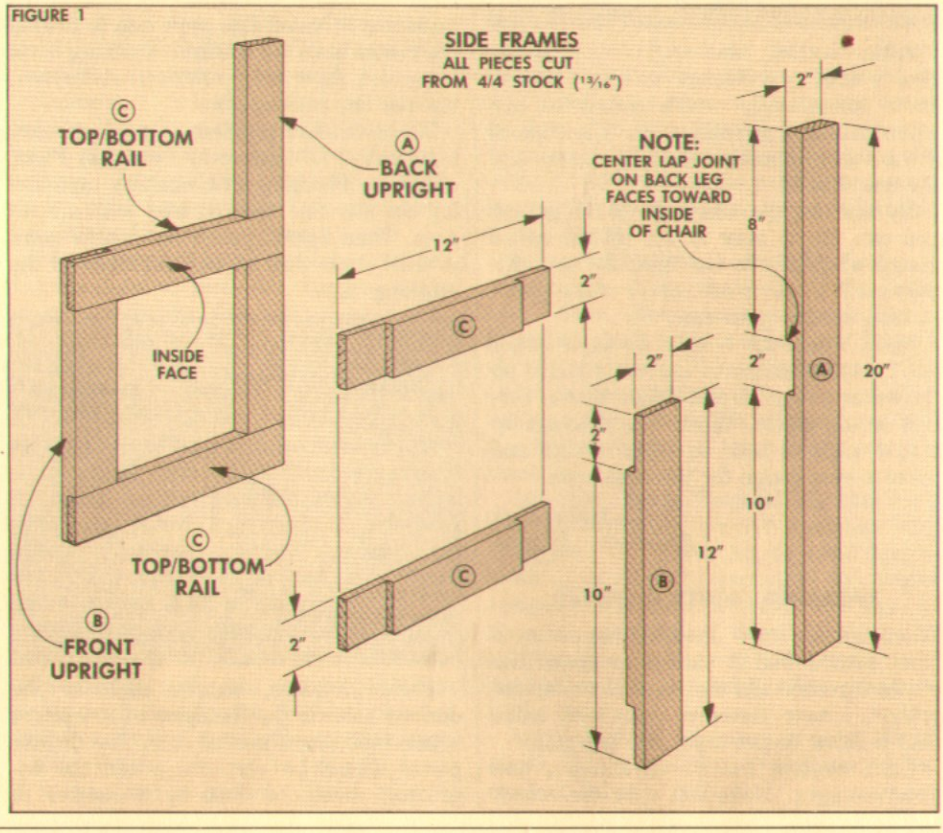

CENTER LAP JOINT

After finishing the end laps, I made the lap joint in the center of the back upright (A). This requires a two-step technique with the table saw and a router.

SHOULDER CUTS. The shoulder cuts for this center joint are made on the table saw by using an auxiliary fence on the miter gauge, see Fig. 4.

STOP BLOCK. To establish the first shoulder (toward the top of the upright), clamp a stop block to the auxiliary fence so the distance from the block to the side of the saw blade toward the rip fence is 12″.

Shop Note. Since the shoulder on the front upright (B) has to align with the shoulder on the back upright, you can use the front upright as a gauge. The distance from the stop block to the opposite side of the blade should be the same as the length of the front upright (12″).

SET RIP FENCE. The rip fence acts as a stop to set the second (bottom) shoulder of this joint. Set the fence 10″ from the *outside* of the sawblade, see Fig. 4. (This allows 2″ for the lap joint, and 8″ for the upper section of the upright.)

MAKE CUTS. Now make the shoulder cuts on the back uprights (A). Then to complete the cuts, I cleaned out the waste between the kerfs with a ½″ straight bit in the router, see Fig. 5.

TAPER BACK UPRIGHTS

Before assembling the pieces to make the side frames, a taper is cut at the top of the back uprights (A). Note: The uprights have been identical up to this point. But now you have to make sure the taper is cut on the *front* edge of the upright.

LAY THEM OUT. To do this, dry-assemble the side frames and lay them down as shown in Fig. 7. Note: You want to lay the frames down so the rails (C) *cross over* the uprights on the "inside" face. (This is really just for appearance — the uprights should look like they extend to the floor on the "outside" of the frames.)

MARK TAPER. Now draw lines to indicate the taper cut. The taper starts 4″ down from the top and ends at the top end, leaving the top 1½″ wide, see Fig. 6.

MARK CENTERLINE. Also, draw a line parallel to the taper line and back ¾″, see Fig. 6. (This line is used later to align the holes for the connector screws.)

TAPER CUT. After marking out the lines, I cut the taper on a band saw and planed the cut edge smooth. Then to complete the top, I rounded the top corners to a ½″ radius, see Fig. 6.

ASSEMBLY. Now all the pieces can be glued and clamped to form the frames. After the glue is dry, round the three corners to a 1″ radius, see Fig. 7. Then round over all the edges with a ¼″ roundover bit in the router table.

FIGURE 2

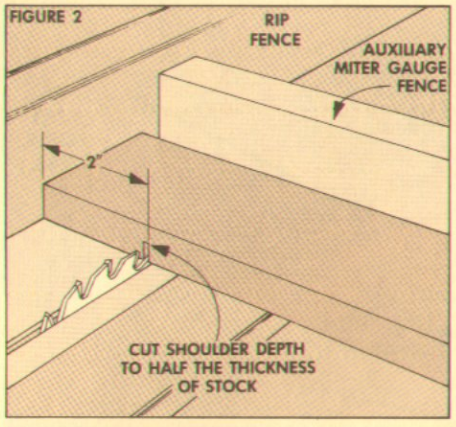

FIGURE 3

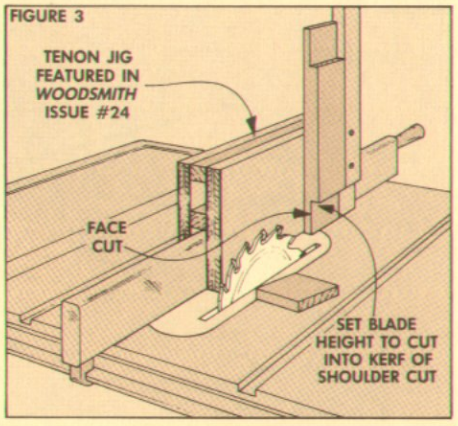

FIGURE 4

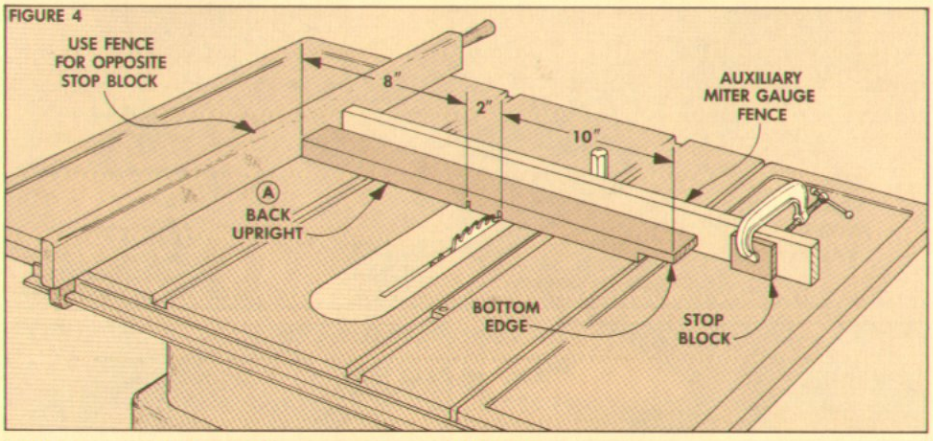

FIGURE 5

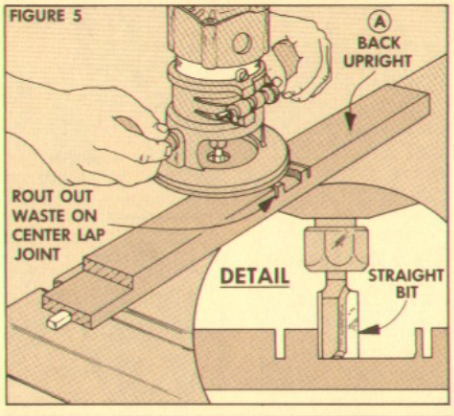

FIGURE 6

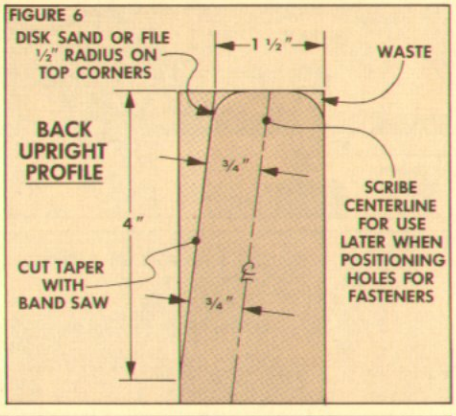

FIGURE 7

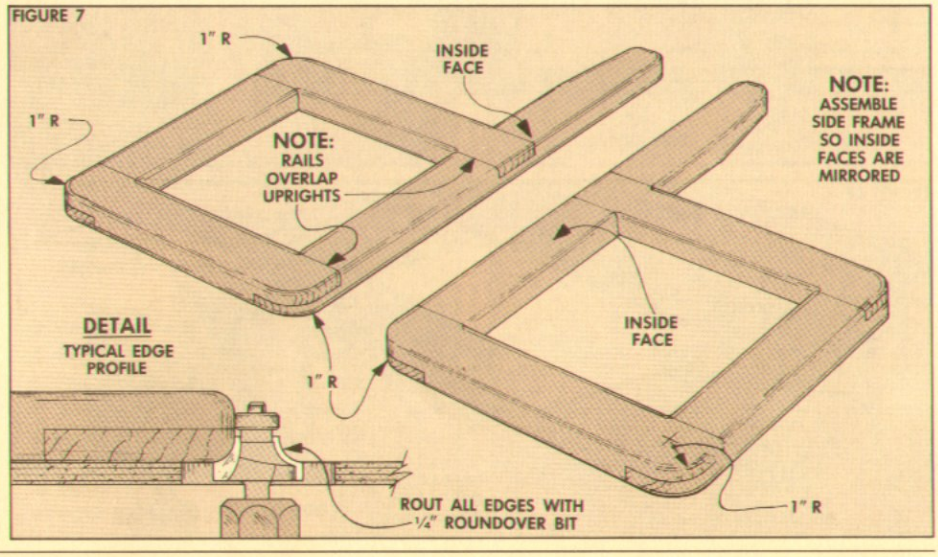

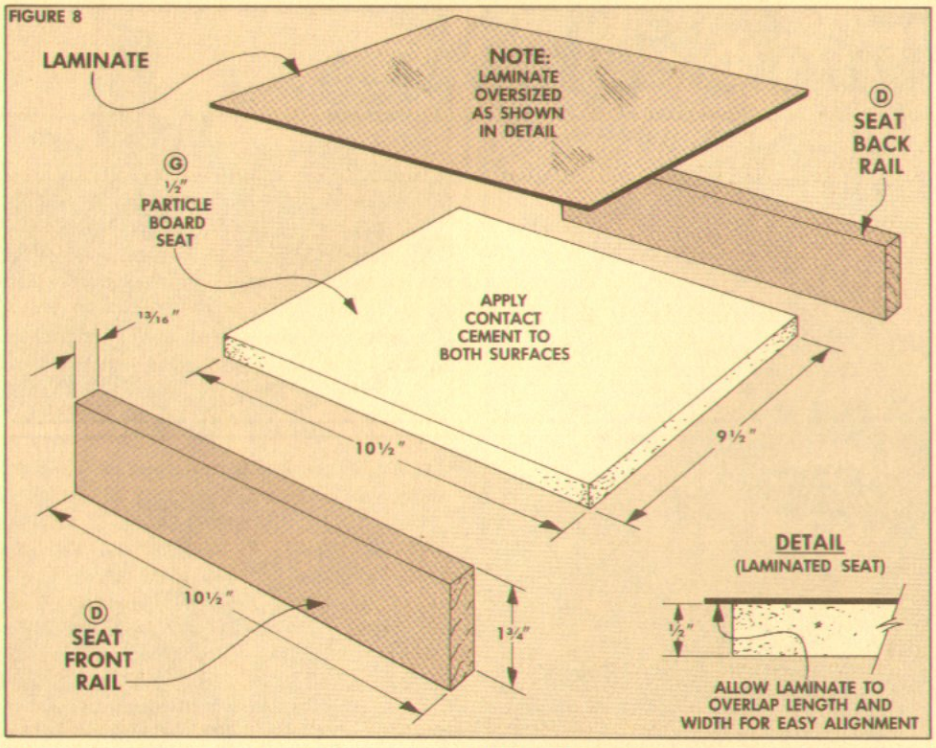

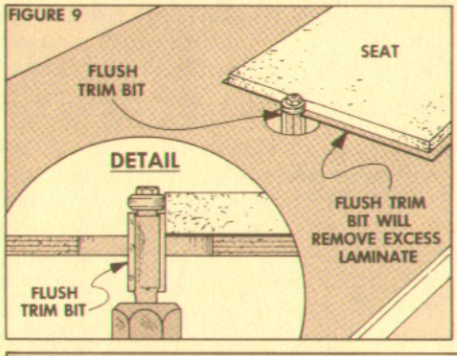

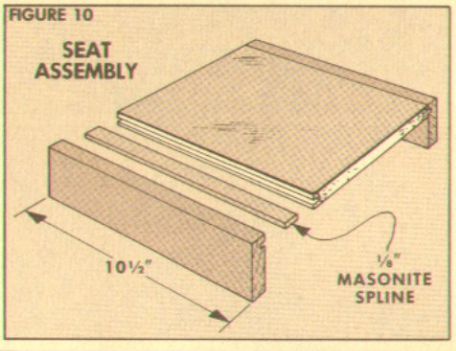

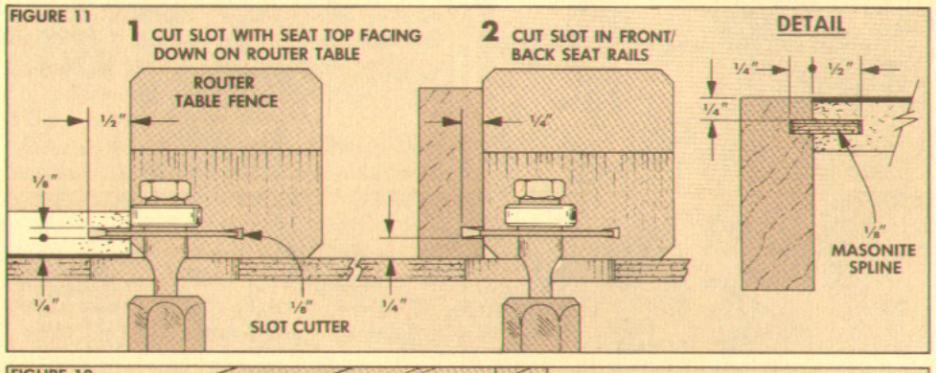

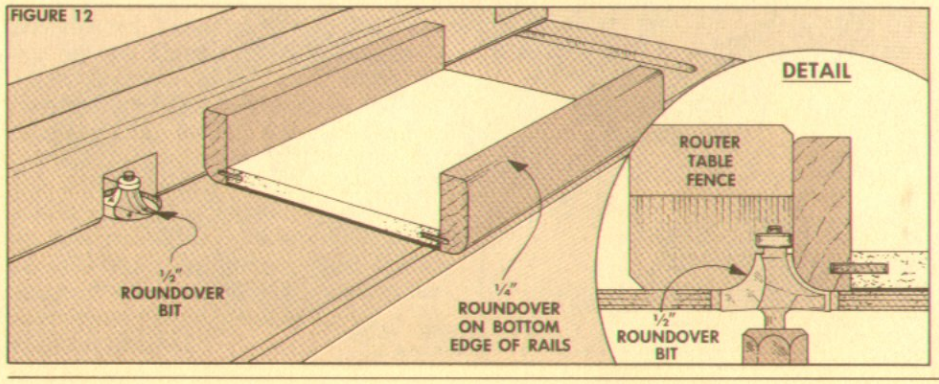

CHAIR SEATS

After the side frames are complete, the chair seats are made to fit between the frames. These seats are made with a piece of particle board that's covered with Formica and joined between two rails.

CUT TO SIZE. The first step is to cut the seat parts to size. Begin by cutting the particle board (G) 10½" wide by 9½" deep. Next, cut the two rails (D) out of 4/4 stock 1¾" wide by 10½" long. Finally, cut a piece of laminate oversized (about 11" by 10"), see Fig. 8.

Note: The laminate is cut oversized so it will overlap the particle board about ¼" on all edges. It can be trimmed flush to the edges of the particle board after the contact cement (I used two coats) dries, see Detail in Fig. 8.

TRIM LAMINATE. To trim the laminate flush with the particle board, I used a flush trim bit in the router table, see Fig. 9. Begin by adjusting the bit so it projects about ⅜" above the router table surface. (This keeps the pilot bearing on the edge of the particle board, see Detail.) Then trim off the overhanging laminate.

SEAT ASSEMBLY. The seat is attached to the front and back rails (D) with a groove and spline joint. The grooves can be cut on a table saw, but I decided to use a ⅛" slot cutter on the router table.

SEAT GROOVE. Begin by adjusting the height of the slot cutter so it's ¼" above the router table surface, see Fig. 11. The depth of the groove in the particle board is ½". (Since this is the depth the slot cutter cuts with the standard pilot bit, I adjusted the fence so it was in line with the pilot, see Step 1 in Fig. 11.)

When the router table is set up, place the seat with the Formica surface *down* (against the table) and cut the slots on the front and back edges.

RAIL GROOVE. After cutting the grooves in the seat, matching grooves are cut on the inside faces of the rails. Leave the slot cutter at the same height, but reposition the fence so the edge of the cutter projects only ¼". Then place the *top edge* of the rail *down* against the router table and cut these grooves, see Step 2 in Fig. 11.

GLUING. After all the grooves are cut, the rails are joined to the seats. To do this, first rip splines from ⅛" Masonite so they're a hair narrower than ¾" (to allow glue relief at the bottom of the grooves).

Then apply glue to the groove and to the facing edges of the seat and rails, insert the splines, and clamp the pieces together, see Detail in Fig. 11.

PROFILE EDGES. After the glue dries, the top and bottom edges of the rails are profiled on the router table. I eased over the bottom edge of the rails with a ¼" round-over bit, see Fig. 12. Then I cut the top edge with a ½" round-over bit.

BACK REST AND STRETCHER

All that's left is to make the back rest and bottom stretcher so the chair can be assembled. Begin by cutting the back rest (F) out of 4/4 stock so that it's 4" wide by 10½" long. Then cut the bottom stretcher (E) 2" wide by 10½" long.

Before assembly, round over all four edges of both pieces with the ¼" roundover bit on the router table, see Fig. 13.

CONNECTORS

We decided to use knock-down connector screws to fasten the chair together. (As kids grow, the table and chairs can be knocked down and shipped or stored for the next generation.)

The connector screws we used are large, deep-threaded screws with an untapered root that allows the joint to be put together and taken apart many times without weakening the joint. (See page 24 for sources for these connectors.)

SHANK HOLES. The shank holes for these connectors are 9/32" diameter, which is equal to the outside diameter of the threads. To locate the shank holes for the connectors that fasten the side frame to the seat, center the holes on the lap joints on the top rail, see Fig. 13.

Then locate the shank holes for the bottom stretcher centered on the length and width of the bottom rails (C), see Fig. 13.

The shank holes in the top of the back uprights (A) that hold the back rest in place are centered on the line scribed parallel to the taper cut, see Detail in Fig. 13.

PILOT HOLES. After the shank holes are drilled, the pilot holes for the connector screws can be drilled in the ends of the seat rails, back rest, and bottom stretcher, see Fig. 14.

Note: These pilots holes are 3/16" dia., which is just a hair larger than the root of the connectors. This size is critical so the connector cuts *reusable* threads in the wood. If the bit is too large, the threads will be weak. If it's too small, the connector will split the wood.

PERPENDICULAR HOLES. To make certain the holes were perpendicular to the ends of the workpieces, I used a Portalign. To do this, clamp the end of the workpiece flush with the top of the bench so the Portalign is supported by the jaws of the bench vise, see Fig. 15.

DEEP HOLES. There's one more thing to watch when drilling the pilot holes for the connectors. Make sure the bottom of the hole is about ¼" deeper than the length of the screw, see Fig. 16. (The end of the connector is blunt and you don't want it to bottom out in the hole.)

FINISHING. After the holes are drilled, fasten the pieces with the connector screws. Then I disassembled the chair to finish it with two coats of polyurethane.

FIGURE 13

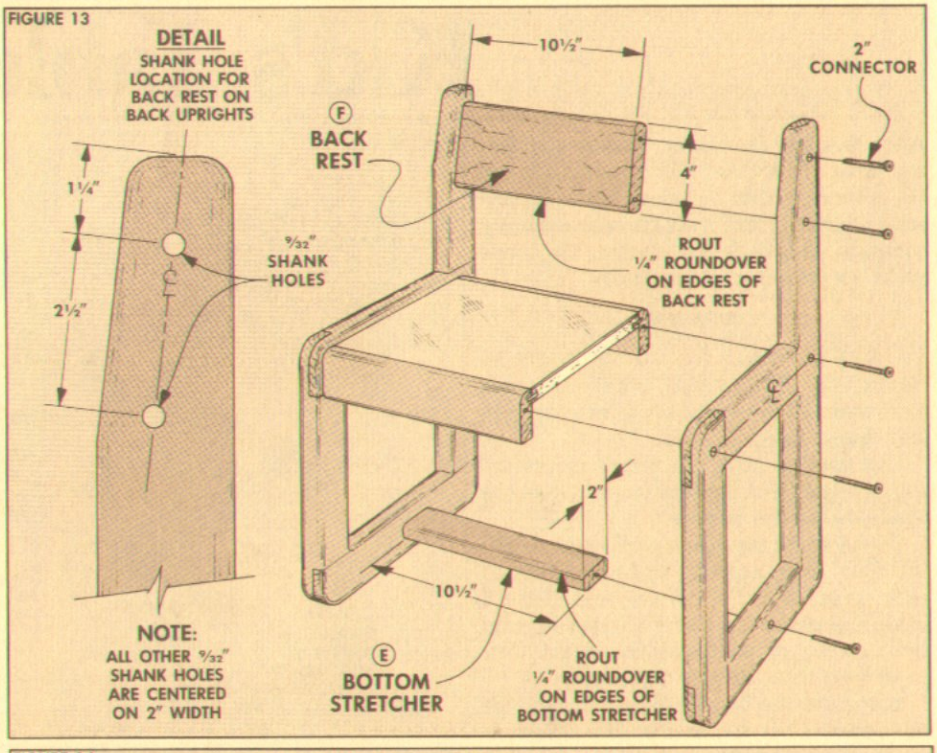

FIGURE 14

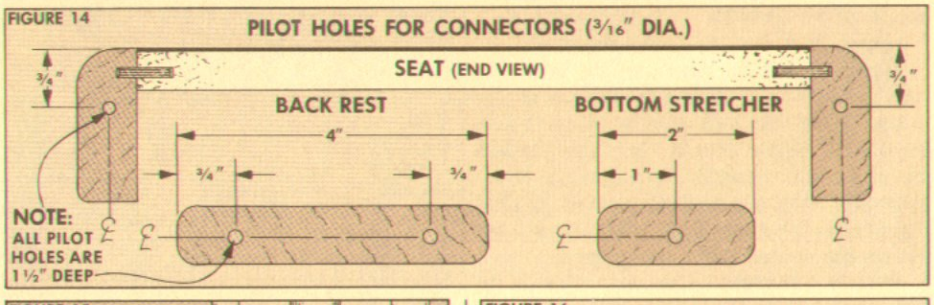

FIGURE 15

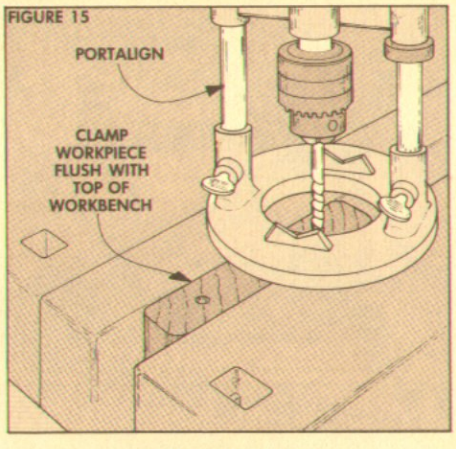

FIGURE 16

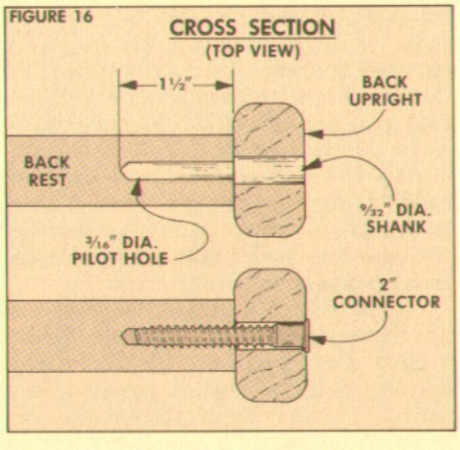

MATERIALS LIST

Overall Dimensions: 12"d x 12"w x 20"h
(Two Chairs)

A BACK UPRIGHTS (4)	13/16 x 2 - 20
B FRONT UPRIGHTS (4)	13/16 x 2 - 12
C FRAME RAILS (8)	13/16 x 2 - 12
D SEAT RAILS (4)	13/16 x 1¾ - 10½
E STRETCHERS (2)	13/16 x 2 - 10½
F BACK RESTS (2)	13/16 x 4 - 10½
G SEATS (2)*	½ x 10½ x 9½

* PARTICLE BOARD

CUTTING DIAGRAM

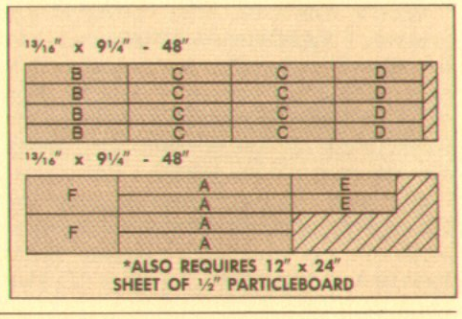

*ALSO REQUIRES 12" x 24" SHEET OF ½" PARTICLEBOARD

Kid's Table

After finishing the chairs, I made a matching table. This table has a particle board top (covered with Formica) that's framed with hardwood and rests on criss-cross leg supports. As with the chairs, the table parts are joined with lap joints.

TOP FRAME

To make the frame for the top, begin by ripping 4/4 (13/16" actual thickness) stock to 2" wide. Then cut the stock into four 30"-long frame pieces (E), see Fig. 1.

LAP JOINTS. After the frame pieces are cut to length, end laps are made to join the top frame at the corners.

To cut these lap joints, I first made the shoulder cuts exactly half-way through each piece, and 2" from the end. Then I made the cheek cut using a tenon jig that rides on top of the table saw fence. (See page 5 for more on this technique.)

TOP. After the four lap joints are cut, the top panel (F) is cut to size. This panel is made of ½" particle board covered with Formica (just like the chair seats).

Begin by cutting the particle board to the shoulder-to-shoulder dimensions of the frame. Next, cut a piece of laminate to size so it's ½" larger overall than the particle board (so it overhangs the edges by ¼" all around). Then use contact cement to glue it and trim the edges flush with a flush trim bit on the router table, see page 6.

SPLINE GROOVES. The next step is to cut the grooves for the ⅛" Masonite splines that join the top to the frame. To cut these grooves, I used a slot cutter, but this time I mounted it in a router for hand-held operation instead of in the router table as for the chair seats.

Shop Note: There are two reasons for hand routing these grooves. First, it's easier to move the router on a big surface (like the table top) than it is to try to slide the tabletop across the router table.

The second reason is that the grooves in the frame pieces that extend into the lap tongues are stopped, see Fig. 2. I find it easier to make a stopped groove with a hand-held router because I see the progress of the bit. (It's not hidden against the face of the router table fence.)

SPLINE AND GLUE. After cutting all the grooves, I ripped some ⅛" Masonite a hair less than 1" wide. (This leaves just a little glue relief at the bottom of each ½" deep slot.) Then glue the particle board to the frame pieces while at the same time gluing and clamping the lap joints.

SPACERS. After the top is all glued together, four spacers (G) are attached to the bottom for mounting the leg frames. These spacers are made from 4/4 stock 2" wide

FIGURE 1

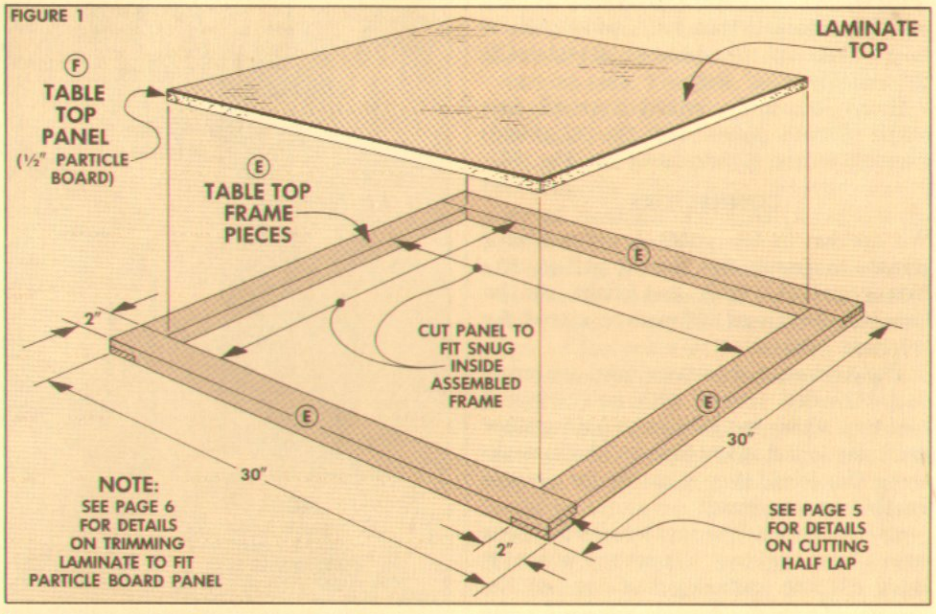

FIGURE 2

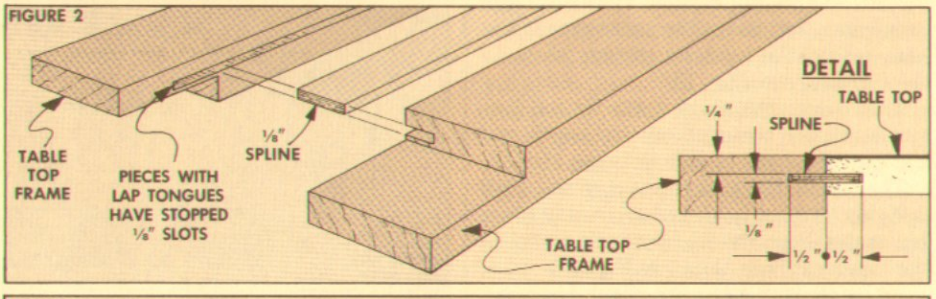

FIGURE 3

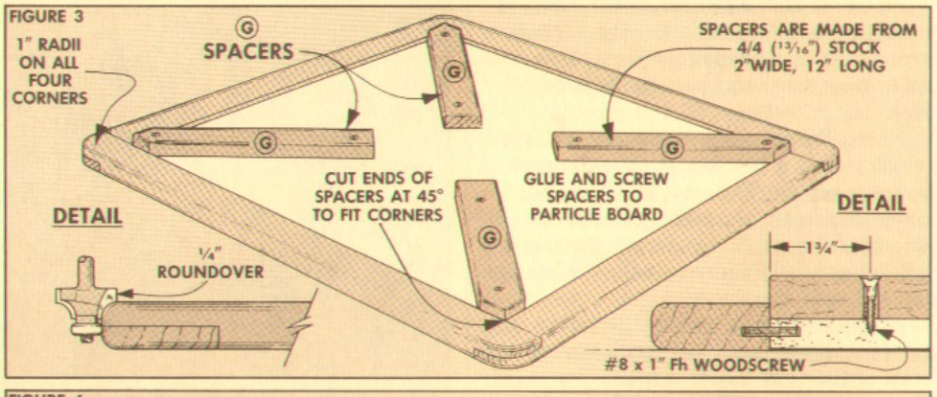

FIGURE 4

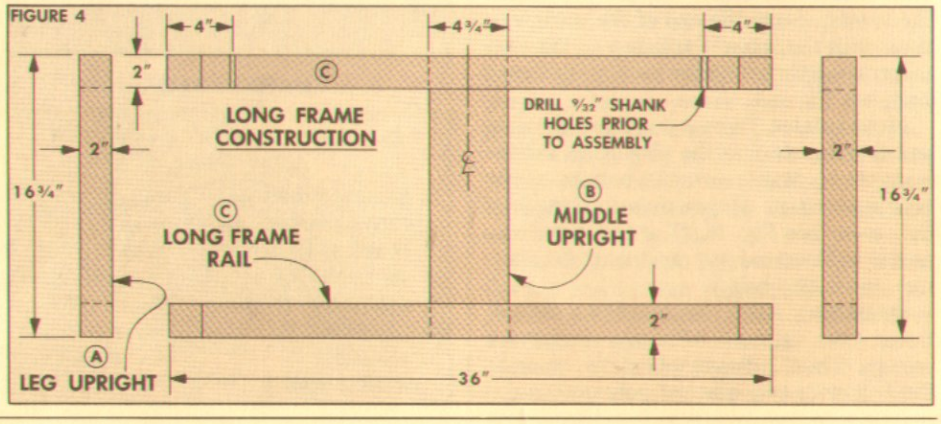

and 12″ long. After cutting them to size, cut a 45° angle off both sides of the ends to fit into the corners of the frame. Then glue and screw them in place, see Fig. 3.

BASE FRAMES

When the spacers are in place, the top is complete. The next step is making the leg frames. The legs consists of three frames—two short ones and one long one—that fit together in a cross shape, refer to figure 6.

CUT TO SIZE. Begin by cutting all the pieces for both the long frame and the short frames to size, refer to Fig. 4 and 5.

LAP JOINTS. All of these pieces are joined with lap joints cut on the ends of the pieces, see Figs. 4 and 5. The long frame also has a center lap on the two long frame rails (C). (See page 5 for more on cutting lap joints.)

MOUNTING HOLES. Before the frames can be assembled, several holes have to be bored through the width of the stock. These holes are for joining the two short frames to the long frame, and for attaching the assembled base to the spacers on the table top. (To make sure these holes are straight, bore them with a drill press.)

Note: Although the two short frames start out being identical twins, the mounting holes have to be bored so they don't run into each other. Lay out the frames and mark the position of the mounting holes as shown in Fig. 5.

GLUE TOGETHER. After all the shank holes are drilled, the frames can be glued together. When the glue is dry, cut a 1″ radius off the bottom outside corner of all the frames and a ¼″ radius off the bottom inside corner of the two short frames, see Fig. 6. Then use a ¼″ round-over bit to round over the outside and inside edges of all the frames.

ASSEMBLY

Now the frames are ready for assembly. Begin by connecting the two short frames to the long frame. To locate the pilot holes, draw a centerline on both sides of the upright (B) of the long frame, see Fig. 6.

Now, with the frames resting upright on a flat surface, mark the locations of the pilot holes. (Push a 9/32″ drill bit through the shank holes to mark a point, and square across to mark this point on the centerline.) Then drill 3/16″ pilot holes at these locations. Finally, connect the base frame with 2¾″-long connectors, see Fig. 6.

MOUNT FRAME TO TOP. To mount the leg frame to the top, turn the top upside down and position the leg frames centered on the spacers. Next, mark the location of the pilot holes on the spacers. Then drill 3/16″ pilot holes for the connectors.

FINISH. After the pilot holes are drilled, attach the leg frames to the top. Then I disassembled the top and frames so I could apply two coats of polyurethane.

FIGURE 5

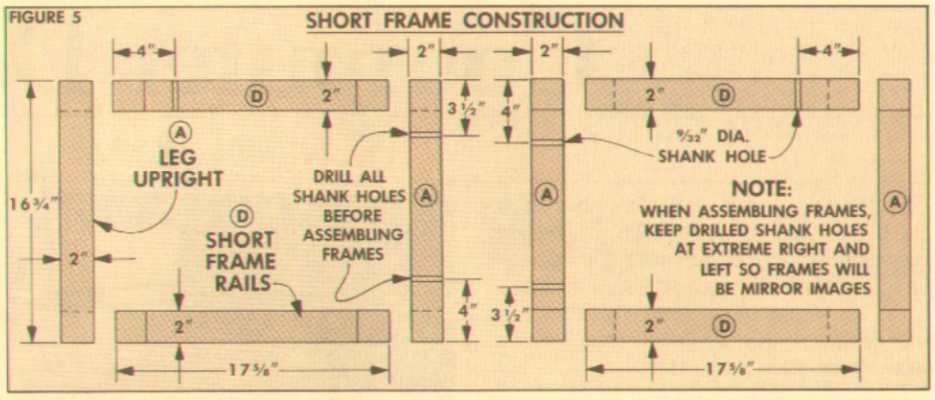

FIGURE 6

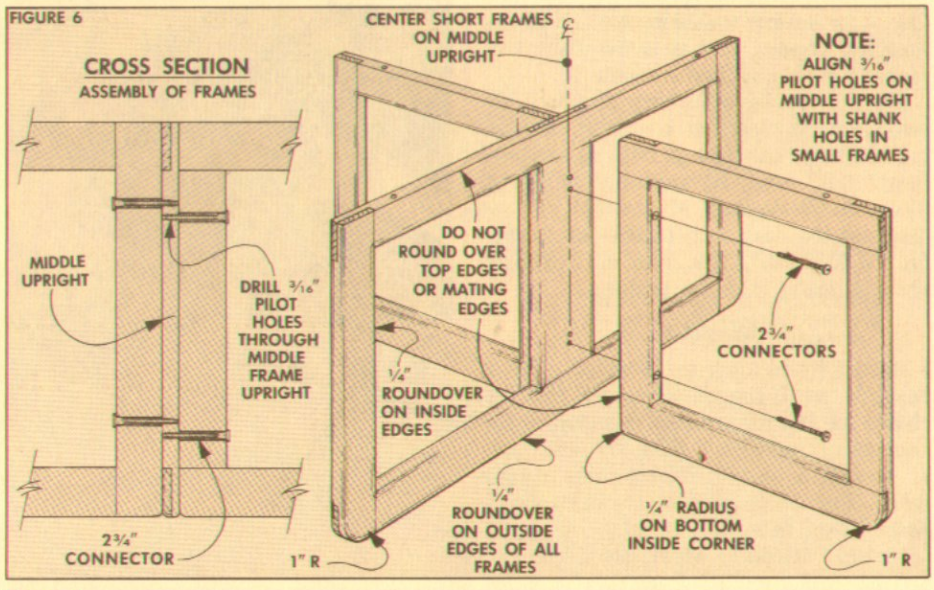

FIGURE 7

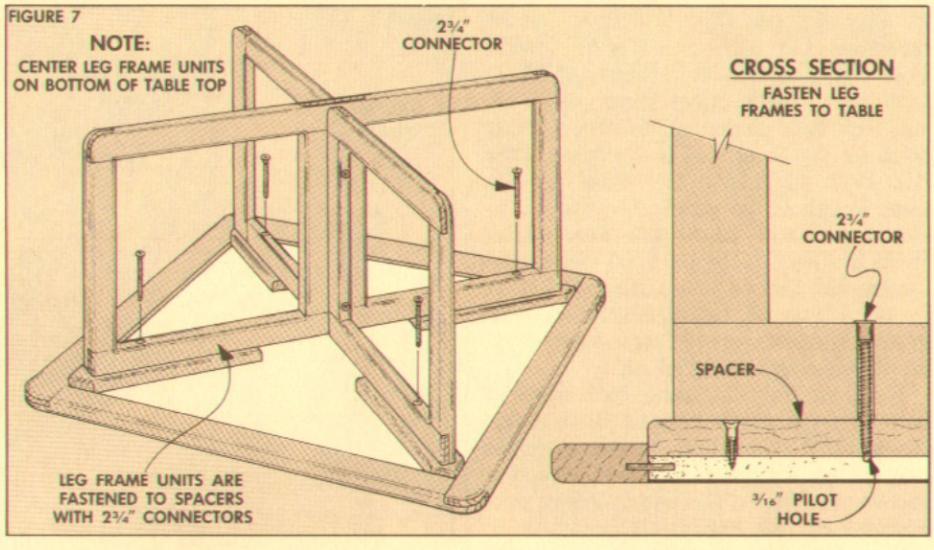

MATERIALS LIST

Overall Dimensions: 30″w x 30″d x 18″h	
A LEG UPRIGHTS (6)	13/16 x 2 - 16¾
B MIDDLE UPRIGHT (1)	13/16 x 4¾ - 16¾
C LONG FRM RAILS (2)	13/16 x 2 - 36
D SHORT FRM RAILS (4)	13/16 x 2 - 17⅝
E TABLE TOP FRAME (4)	13/16 x 2 - 30
F TABLE TOP BASE (1)*	½ x 26 x 26
G SPACERS (4)	13/16 x 2 - 12

* PARTICLE BOARD

CUTTING DIAGRAM

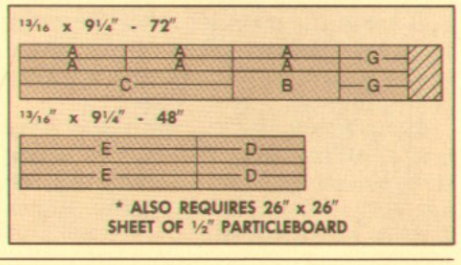

Computer Desk

PC MAIN FRAME

I'm always *amazed* at the number of requests we get for computer desk plans. Especially when you consider it's a piece of furniture that didn't exist 10 years ago.

As we began working on the design for this desk, we quickly found that two features were most important.

First, the desktop had to be large and flat — for holding the computer and all the manuals, papers, and assorted disks that seem to gather around computers.

Second, we wanted a way to mount the computer's keyboard at a comfortable typing height. If the desk is built at a typical height (29″), and the keyboard is simply placed on the desktop, it's too high. So, we designed the desk with a slide-out drawer for the keyboard. This puts the keyboard about 4″ lower than the desktop.

DESKTOP

I started by building the desktop. This is basically an L-shaped structure that includes the top itself which is joined to the back panel, see Fig. 1. (The views in Figs. 1, 4, and 5 show this assembly upside down. This whole assembly rests on the C-shaped legs, refer to Fig. 14.)

CUT PLYWOOD. To begin, cut the top (A) and the back panel (B) from a 4x4 sheet of ¾″ plywood, see Fig. 1. The top is 24″ wide and the back panel is 8¼″ wide. Both pieces are cut to a length of 47½″.

EDGING STRIPS. After these pieces are cut, rip two pieces of 4/4 (13/16″ thick) stock for the front and back edging strips (C). Both strips are 1½″ wide and the same length as the panels, see Fig. 1.

TONGUE AND GROOVES. The edging strips are held to the plywood pieces with tongue and groove joints. To make these joints, I started by cutting a ¼″-wide groove in a test piece. (This is used to test fit the tongues as they're cut.)

Now, cut rabbets along *both* edges of both plywood panels (A and B) to create tongues that fit the test groove. After the tongues are cut on the plywood, matching grooves are cut on the *inside* face of each edging strip, see Fig. 1.

Shop Tip. Position the groove so the edge of the strip sticks up slightly (about 1/32″) above the plywood. After the strips are glued on, these edges can be planed perfectly flush with the plywood, see Shop Notes, page 23.

GROOVE FOR BACK. After the grooves are cut on the inside face of each edging strip, also cut a groove centered on the *bottom* edge of the back edging strip to join it to the back panel (B).

FIGURE 1

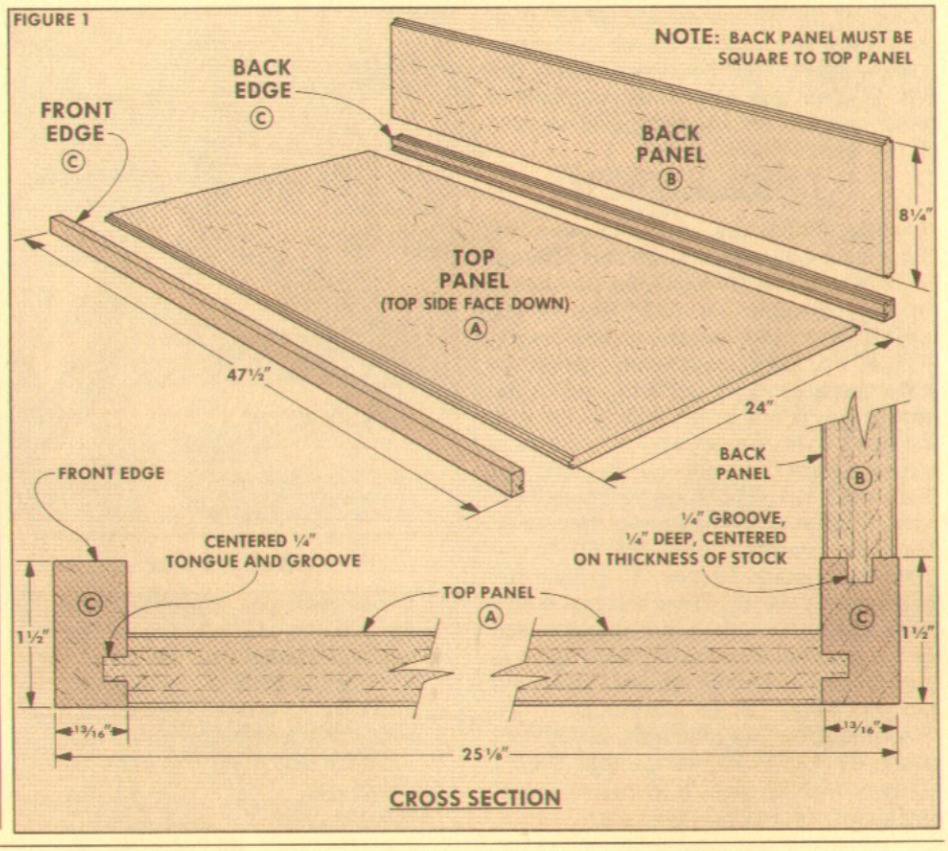

ASSEMBLY. Now that all the grooves are cut, the desktop can be assembled. Start by gluing the edging strips to the top panel, see Fig. 1. Then glue the back panel (B) into the groove on the back strip.

TOP SUPPORTS

After the desktop is assembled, two L-shaped supports are added. These supports hold the drawer guides, and also keep the top and back from bowing.

CUT THE PIECES. Each of the two top supports consists of a long center arm (D) and a support block (E), see Fig. 2. (Be sure to match the grain direction in the support block with the grain direction in the support arm.) After the pieces are cut to size, glue them together to form the two L-shaped supports.

CLEATS. The supports are mounted to the plywood top with four ¾" x ¾" cleats (F), see Fig. 4. (While you're at it, cut two end cleats which are used to mount the whole desktop assembly to the legs.)

MOUNT CLEATS. I mounted the cleats to the L-supports with No. 8 x 1¼" particle board screws. To do this, drill four 5/32"-dia. countersunk shank holes through two sides of the cleat, see Fig. 3. (Offset the holes so the screws won't run into each other, see Detail.)

SCREW CLEATS DOWN. After the cleats are mounted to the support arms, screw and glue them to the underside of the top so the outside face of the support arm is 11¼" from the end, see Fig. 4. Then screw and glue the two end cleats on each end of the desktop (so the leg assembly can be attached later).

Shop Tip. I mounted the end cleats 1/16" from the ends of the desktop so the legs could be drawn tight, with no chance for a gap, see Detail in Fig. 4.

BOTTOM TROUGH

After the supports and cleats were attached, I added an L-shaped bottom trough to strengthen the whole assembly. (It's also a nice way to store all the cords coming out of the computer.)

CUT BOTTOM. The trough consists of a bottom (G) cut 4 7/16" wide and the same length as the top panel (47½"), see Fig. 5. To join it to the back panel (B), cut a groove to accept the tongue already cut on the bottom edge of the back panel (B), see Cross Section in Fig. 5.

MOUNT BOTTOM. Now glue the trough bottom (G) onto the tongue on the back panel (B). Also, screw it to the support blocks, see Fig. 5. (While you're at it, drill two shank holes 1⅛" from the end of the trough bottom so later it can be screwed to mounting blocks on the legs.)

TROUGH LIP. Finally, to keep all the wires in place, I cut a 3"-wide trough lip (H) and glued it to the front edge of the trough bottom, see Fig. 5.

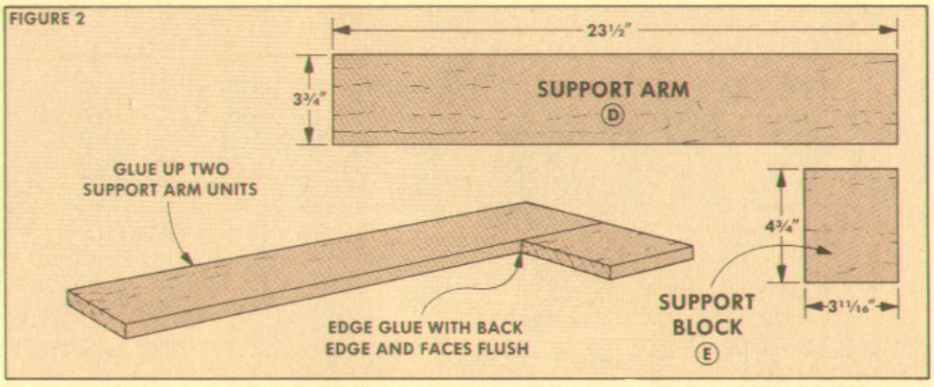

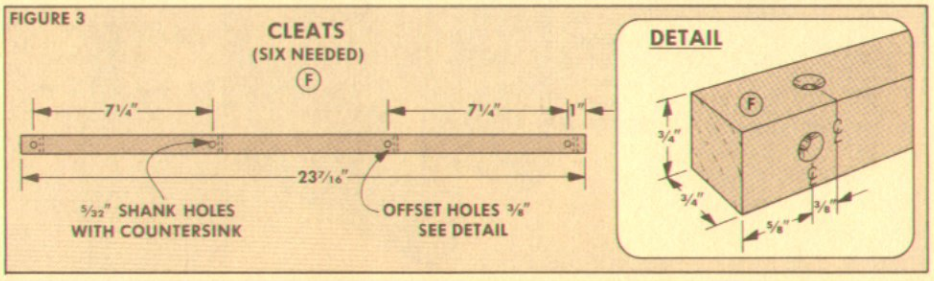

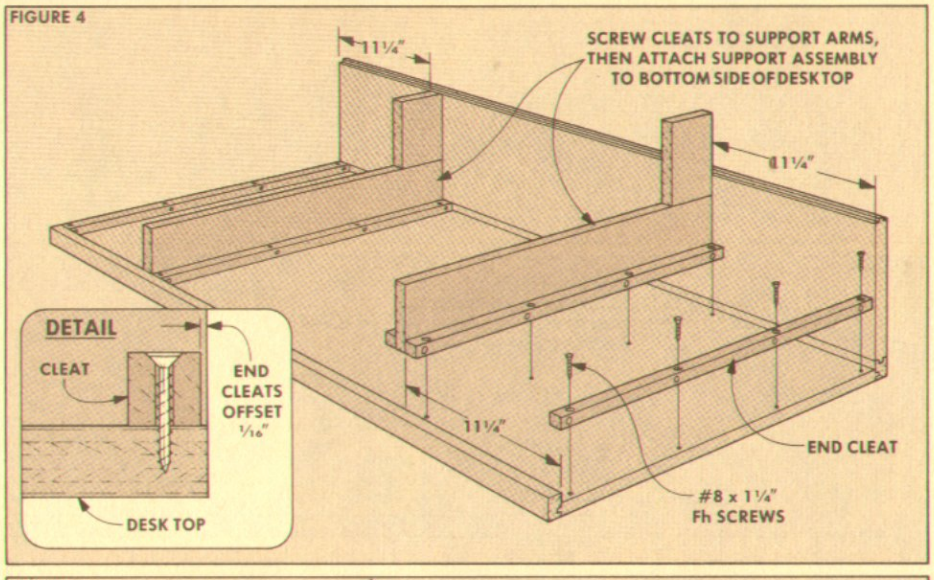

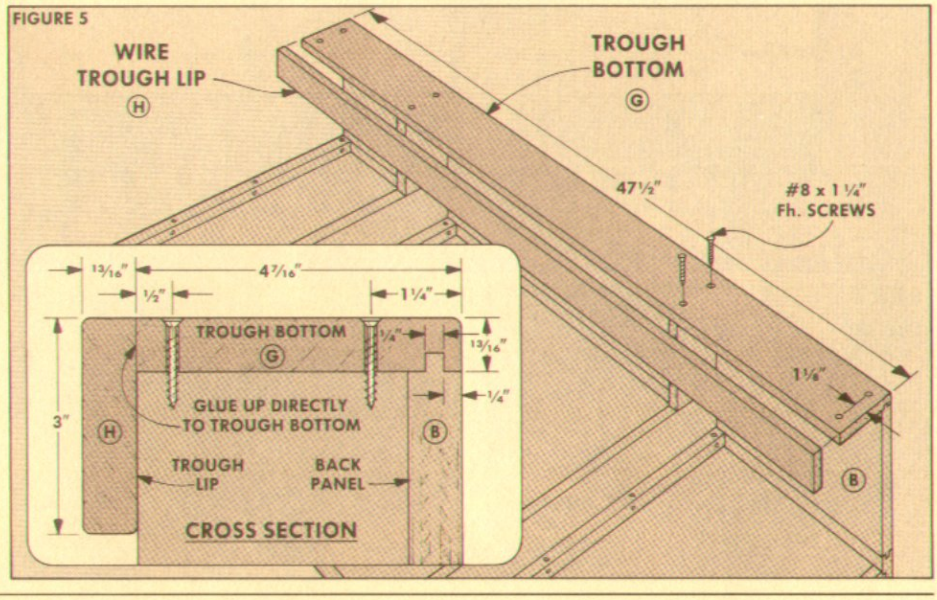

FIGURE 6

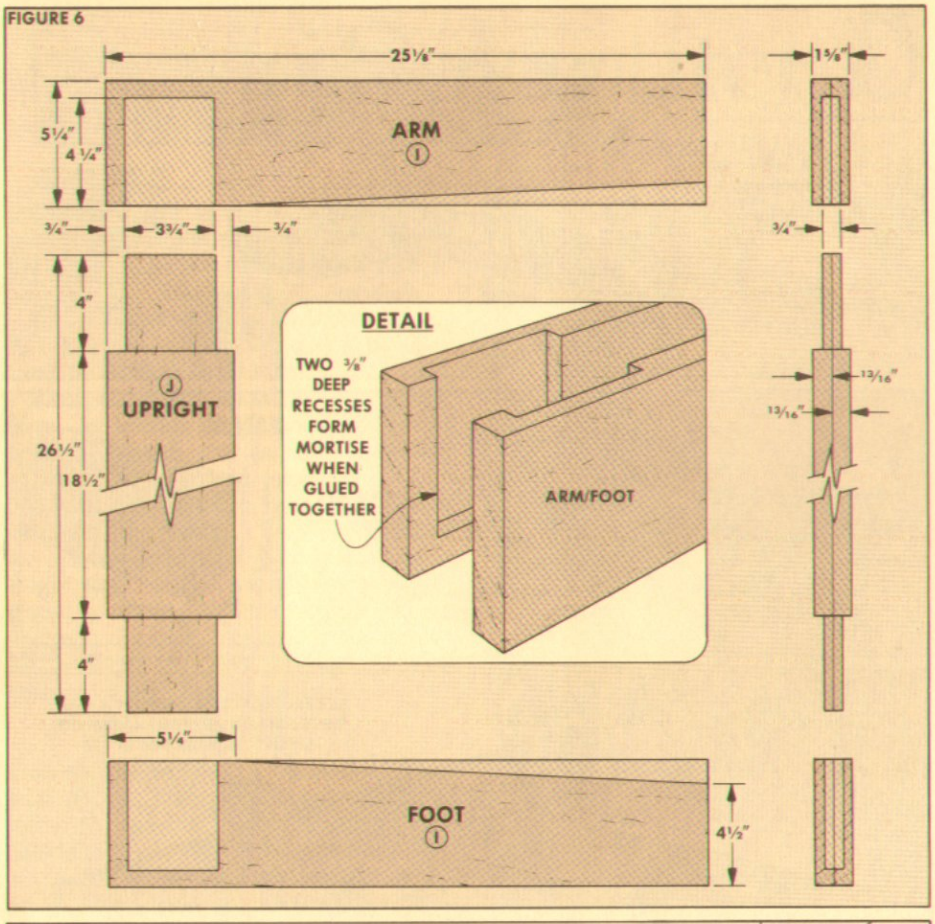

FIGURE 7

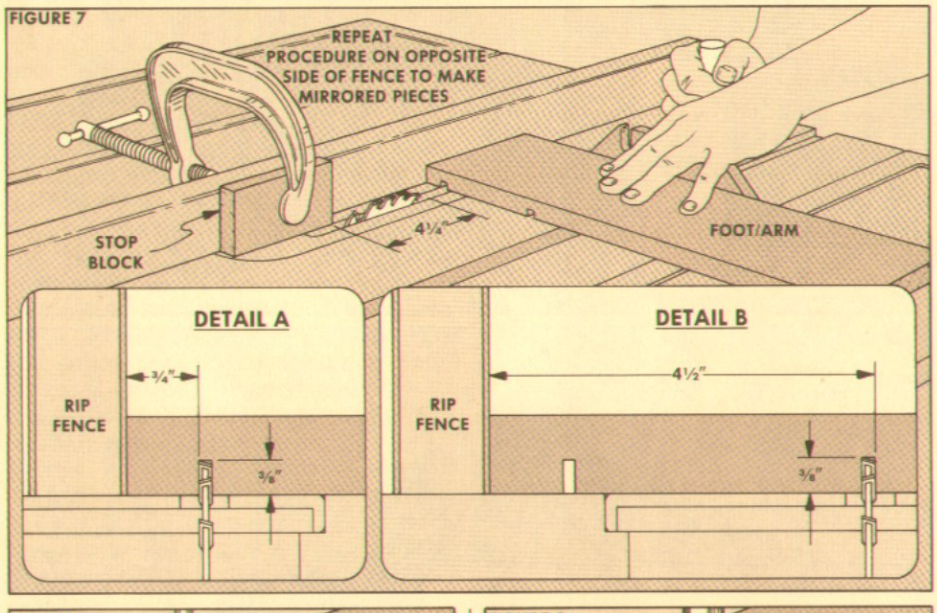

FIGURE 8

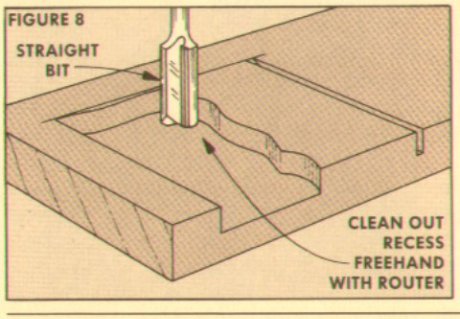

FIGURE 9

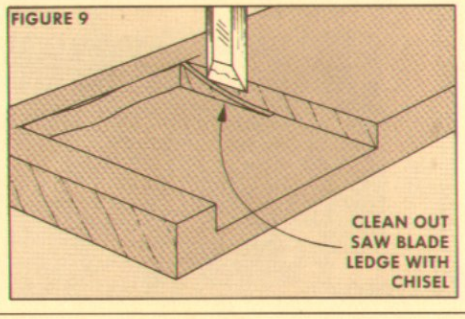

LEG UNITS

After the desktop assembly is complete, work can begin on the legs. The legs are C-shaped units that consist of an upright joined between a horizontal arm and a foot.

ARMS AND FEET

The four arms and feet (I) are identical. Each one is made by laminating two pieces of 4/4 (13/16" thick) stock together, see Fig. 6. Begin by cutting eight pieces 5¼" wide and the same length as the depth of the top assembly (25⅛" in my case).

MORTISE. Before gluing the pieces together, I cut recesses on the inside face of each piece. (The recesses form a mortise when the pieces are glued, see Detail in Fig. 6.) I cut the recess in two steps.

DEFINE SIDES. First, I made two stopped cuts on the table saw to define the sides of the recess. To do this, raise the blade to a height of ⅜". Then set the rip fence so there's ¾" *between* the blade and the fence, see Detail A in Fig. 7.

To prevent the blade from going all the way across the width of the workpiece (you want a recess, not a dado), clamp a stop block to the rip fence. It's clamped 4¼" back from the point where the blade enters the table, see Fig. 7.

MAKE THE CUTS. Once the saw is set up, use the miter gauge to support the workpiece and make stopped cuts in four arm/foot pieces only. (Note: The other four pieces are cut later.)

To cut the other side of the recess on the same four pieces, move the fence so the *outside* of the blade is 4½" from the fence, see Detail B in Fig. 7.

SECOND SET. Now, to make the mirrored cut on the other four pieces, move the rip fence to the *left* of the saw blade, set up the stop block on the other side of the fence, and repeat the same procedure. (Note: If the rip fence on your saw won't move to the left of the blade, clamp a 2x4 to the saw table as a temporary fence.)

ROUT OUT EXCESS. After the sides of the recess are defined with the saw kerfs, the next step is to rout out the inside to actually form the recess. I did this freehand with a router and a ½" straight bit set to the same depth as the saw kerf (⅜" deep), see Fig. 8.

To complete the recess, I used a chisel to clean off the little "ledge" (left by the saw blade cut), see Fig. 9.

GLUE TOGETHER PIECES. Once the recesses are complete, glue the matching pieces together with the edges flush so the recesses form a mortise.

CUT TAPER. After the glue dries, I cut a long taper off the top edge of the feet and the bottom edge of the arms. To do this, I used a shopmade taper jig on the table saw, see Fig. 10. (For more on this jig, see Shop Notes, page 23.)

UPRIGHTS

Now work can begin on the uprights (J). Each upright is made from two pieces of 4/4 stock laminated together, see Fig. 6.

CUT UPRIGHTS. Start by cutting four pieces of stock and glue them together to make two uprights. Trim them to 5¼" wide by 26½" long, see Fig. 6.

TENONS. Now cut 4"-long tenons on the ends of the uprights to fit the mortises in the arms/feet. Cut the tenons so the shoulder-to-shoulder distance is 18½". (This makes the desk 29" high.)

ASSEMBLY. After the tenons are cut, glue them into the mortises in the arms and feet to form the C-shaped leg units.

ASSEMBLING LEG UNITS TO TOP

The leg units are attached to the cleats that are already mounted on the desktop assembly. They're also joined to two mounting blocks that are inside the trough, see Figs. 11 and 13.

MOUNTING BLOCKS. The two mounting blocks (K) are each made from two pieces of stock laminated together, see Fig. 11. Cut the glued-up blocks to a width of 2" and to length (3 11/16") to fit inside the trough, see Fig. 11. To mount the blocks, drill two shank holes through each block.

POSITIONING THE TOP. The easiest way to fasten the leg units to the top is to lay one of the leg assemblies on the floor with the inside facing up. Then temporarily position the top unit on it so it's flush with the top and front of the arm, see Fig. 11.

The mounting block fits inside the trough, see Fig. 13. To mark its location, reach down into the trough and trace the U-shape of the trough with a pencil.

Before removing the top unit, push an awl through the shank holes in the *cleat* to mark the location of the pilot holes in the arm. Then remove the top and drill the pilot holes in the arm.

ATTACHING THE BLOCK. Now glue and screw the mounting block (K) within the pencil line, see Fig. 12.

After the block is screwed in place, position the top unit onto the leg unit and screw the cleat to the arm. Then screw through the bottom of the trough to join it to the mounting block, see Fig. 13. (Note: I didn't glue the top to the legs in case I wanted to take it apart later.)

ROUND OVER EDGES

After both leg units are screwed to the top, I rounded over all the edges and ends of the legs and edging strips — except in two places. Don't round over the bottom of the front edging strip (where the drawers will be) and don't round the bottom edges and front inside edge of the arms, see Fig. 14.

GLIDE PADS. Finally, mount two glide pads to the bottom of each foot, see Glide Pad Detail in Fig. 14.

FIGURE 10

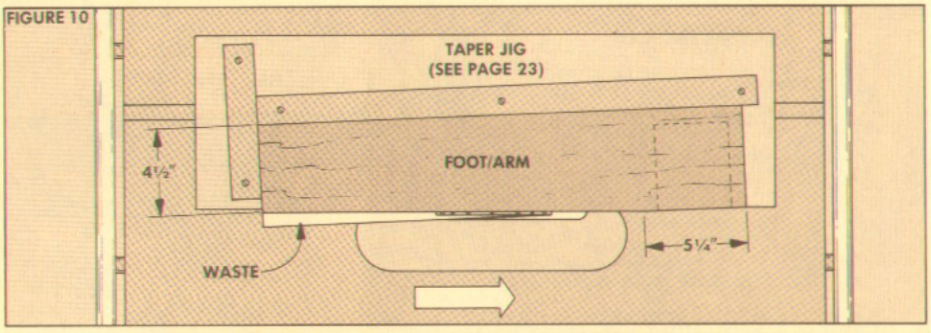

FIGURE 11

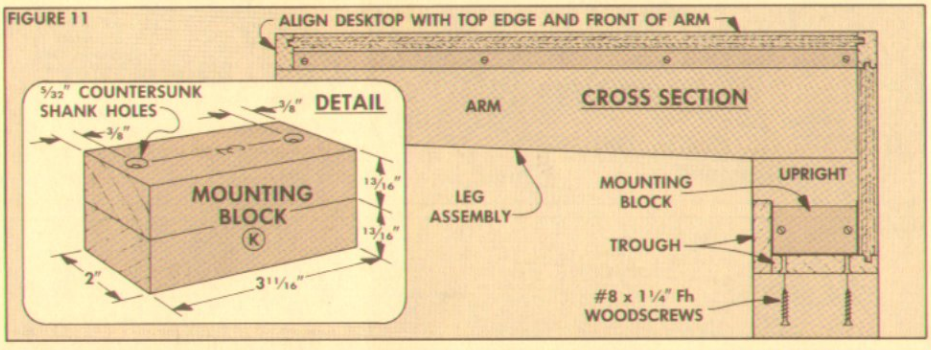

FIGURE 12

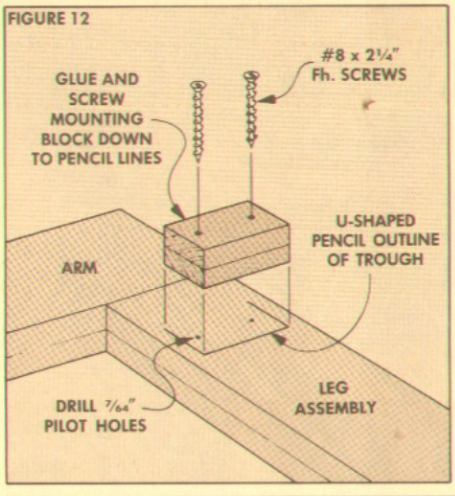

FIGURE 13

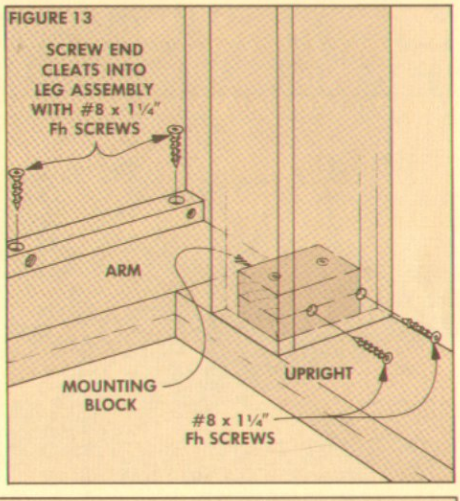

FIGURE 14

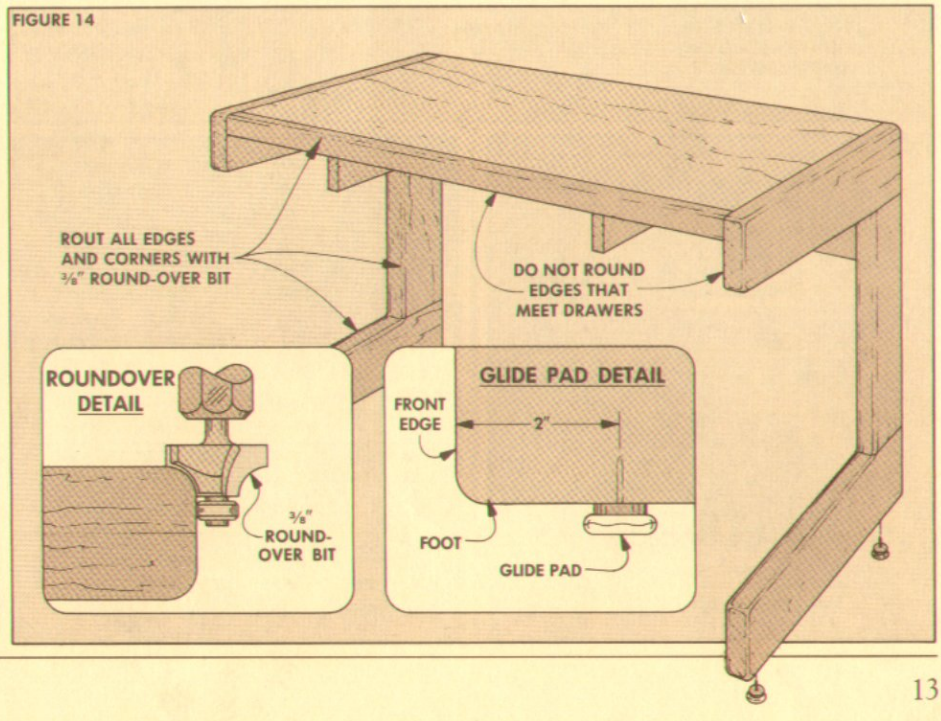

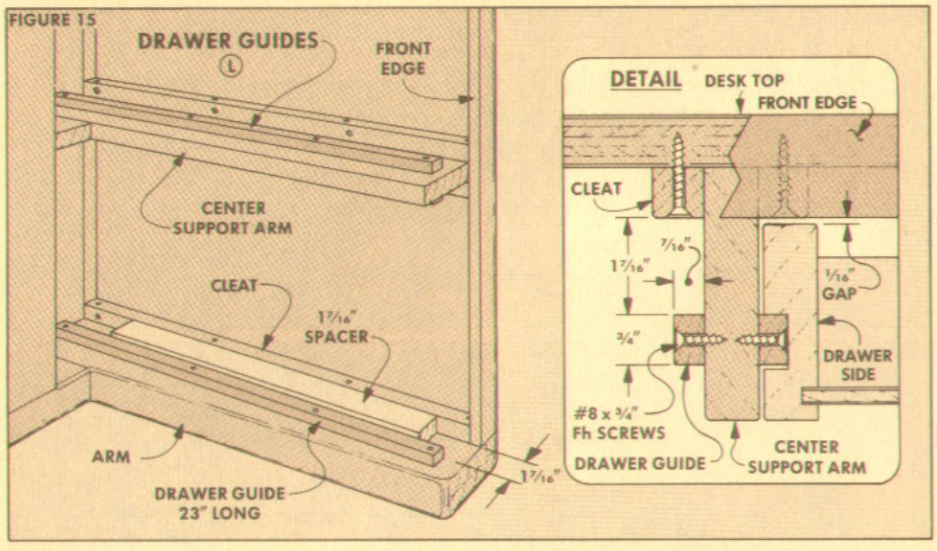

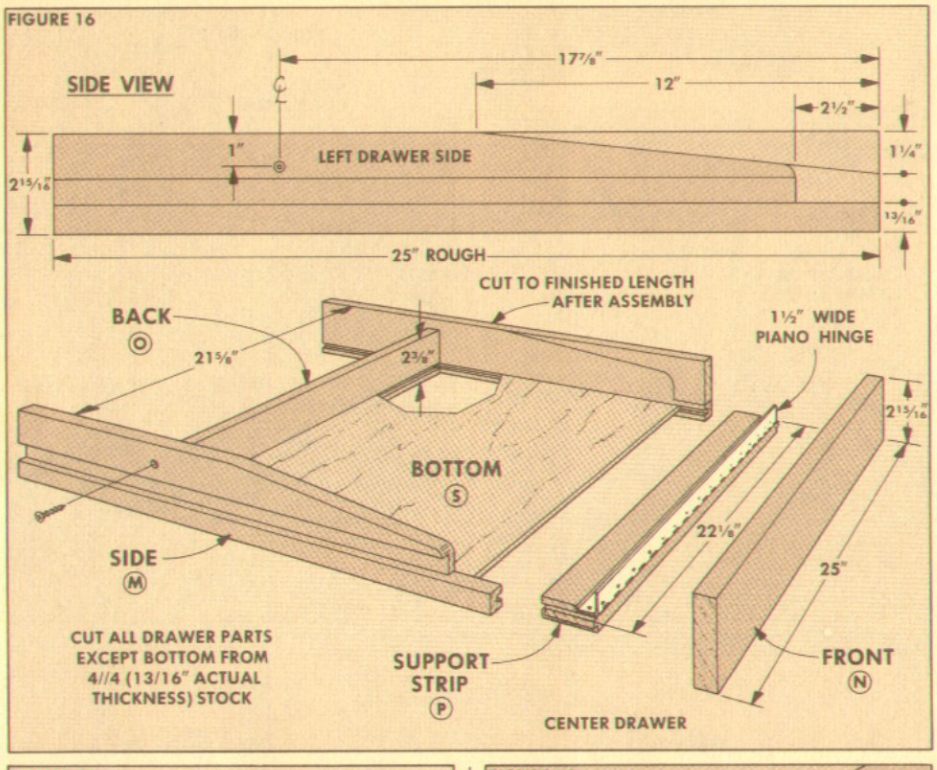

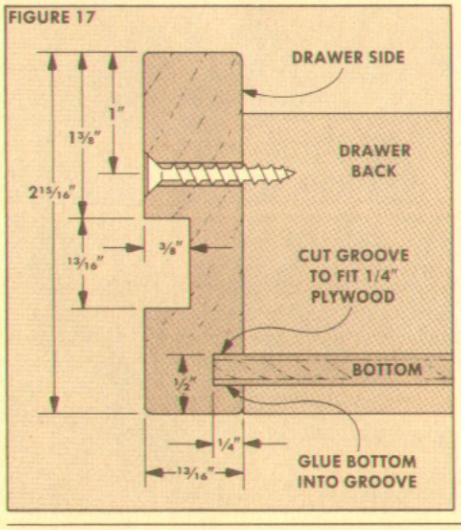

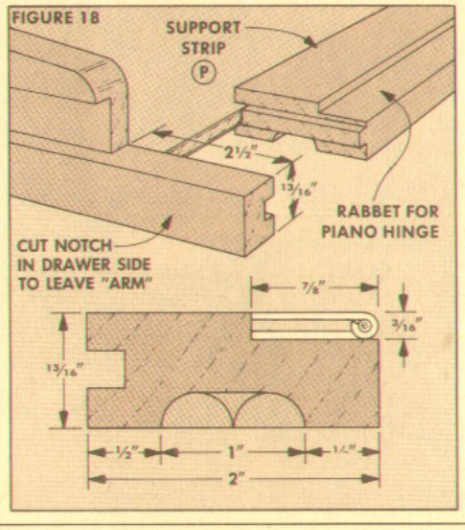

DRAWER GUIDES

After the leg and top units are assembled, the three drawers can be added. I started by making the guides to hold the drawers.

THE GUIDES. Begin by ripping enough stock 7/16" x 3/4" to make six 23"-long drawer guides (L), see Fig. 15. To mount the guides, drill countersunk shank holes through each guide for No. 8 x 3/4" screws.

MOUNT THE GUIDES. The guides are mounted 1 7/16" down from the bottom of the edge of the cleats (F), see Fig. 15. (To keep the guides in position while mounting them, I cut a 1 7/16"-wide spacer to fit between the guide and cleat.)

DRAWER SIDES

After the guides are attached, work can begin on the three drawers.

CUT TO SIZE. I started by cutting the six drawer sides (M) 2 15/16" wide and to a rough length of 25". (They're cut to final length after the drawers are assembled.)

CUT GROOVES. Each drawer side has a 3/8"-deep groove cut to fit over the drawer guides, see Fig. 17. I cut this groove 1/16" wider than the drawer guides (13/16") for an easy fit. I also located it 1 3/8" down from the top edge so the drawer front will clear the front edge of the desktop by about 1/16", refer to the Detail in Fig. 15.

CENTER DRAWER

Next, I built the center keyboard drawer. This drawer is unique because it has a special drop-down front that allows access to the keyboard.

PROFILE SIDE. To build this drawer, I started by cutting a tapered profile on two of the drawer sides, see Fig. 16. (This is just for appearance to match the slant of the keyboard.) Also, cut a 2 1/2"-long notch off the front end of the drawer sides to leave a 13/16"-thick "arm", see Fig. 18.

DRAWER FRONT. The center drawer front (N) is cut to the same width as the drawer sides (2 15/16"), see Fig. 16. Then, this piece is cut to length so it *overlaps* the ends of the two center supports (25"), refer to Fig. 19.

DRAWER BACK. After cutting the drawer front to length, I cut the drawer back (O) to a width of 2 3/8", see Fig. 16. The length of this piece equals the distance *between* the two center supports (23 3/8"), less the thickness of the two sides (1 5/8"), less 1/8" (for side clearance).

FRONT EDGE. The drawer front is designed to drop down so you can get to the keyboard, see Fig. 19. To hinge the drawer front, cut a support strip (P) 2" wide and 1/2" longer than the drawer back. (The extra 1/2" is to allow for the 1/4" tongues on the ends, see Fig. 18.)

BOTTOM GROOVE. Before this piece is joined to the sides, cut a groove for the drawer bottom along the *inside* edge of the

sides, back, and support strip, see Figs. 16 and 17.

TONGUES. Now, cut tongues on both ends of the support strip to fit in this groove, see Fig. 18. (Offset these tongues so the bottom of the support strip is flush with the bottom of the drawer side.)

TWO MORE CUTS. There are two more steps on the support strip. First, cut a 3/16"-deep rabbet on the front to accept a piano hinge, see Fig. 18.

Then, rout a 1"-wide finger pull in the bottom by making two passes with a 1/2" core box bit, and cleaning out the center with a 1/2" straight bit.

ASSEMBLY. Now the center drawer can be assembled. Start by screwing the sides to the back. Then temporarily slide the support strip in place so that measurements can be taken for the 1/4" plywood drawer bottom (S), see Fig. 16.

After cutting the drawer bottom to size, glue it into the grooves. (Gluing the bottom into the grooves strengthens the whole drawer so you only need two screws to assemble it.)

HINGE. To complete the center drawer, I mounted a piano hinge to join the drawer front to the support strip, see Fig. 19.

TWO OUTER DRAWERS

There are two smaller drawers mounted on each side of the center drawer.

DRAWER FRONTS. To build the drawers, start by cutting two drawer fronts (Q) to length so they're 1/8" less than the distance between the center drawer and the outside legs (11 1/8"). Then cut rabbets on the ends to accept the sides, see Fig. 20.

DRAWER BACKS. The drawer backs (R) are cut to length equal to the length of the front, less the thickness of the two sides (9 1/2").

GROOVES. Before assembling these drawers, cut a groove for the 1/4" plywood bottom in all the pieces. At the same time, I cut a groove near the top of two of the drawer sides for a 1/4" plywood mouse platform (U), see Fig. 20. (When the keyboard is pulled out, it's nice to have the mouse pad next to it. So, we added a sliding platform for a cushioned mouse pad.)

BOTTOM AND MOUSE PLATFORM. Now cut the drawer bottoms (T) and the mouse platform (U) to fit between the grooves. (The platform is only 10" long so it can slide up or back as needed, see Fig. 20.)

ASSEMBLY. To assemble these drawers, just drill the shank and pilot holes and drive in the screws.

TRIM SIDES. After the drawers are assembled, trim the back ends of all three drawer sides to length so when they contact the back of the desk, the drawer fronts are flush with the front of the desktop.

FINISH. To protect the surfaces from wear, I finished the desk with three coats of polyurethane varnish.

FIGURE 19

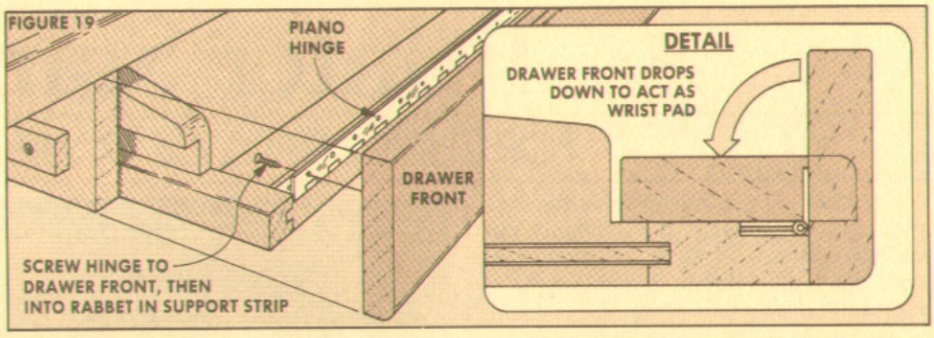

FIGURE 20

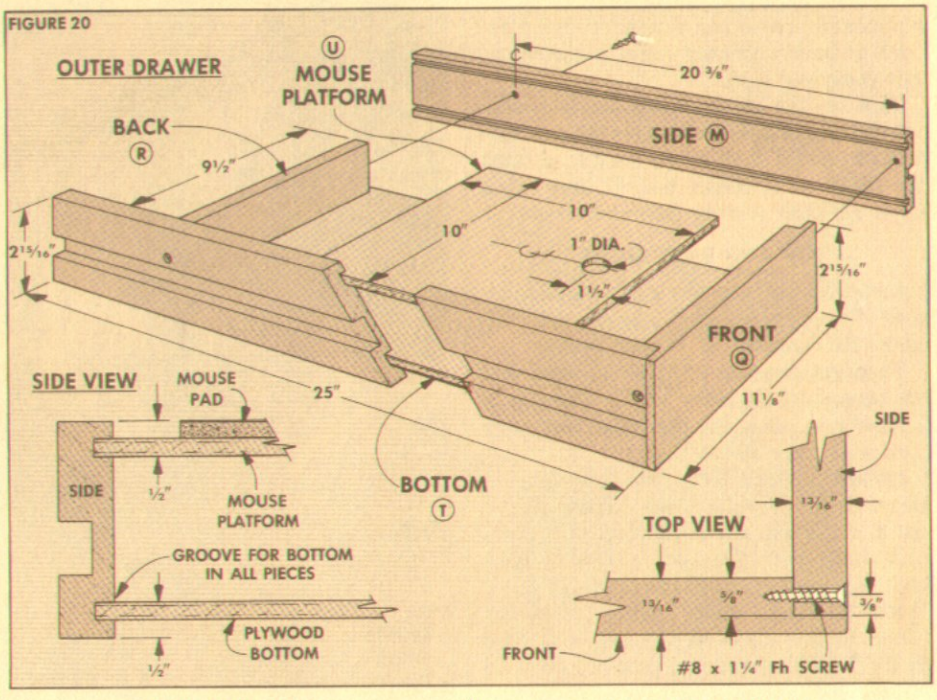

MATERIALS LIST

Overall Dimensions: 25 1/8" d x 50 3/4" w x 29" h

DESK TOP	
A Top Panel (1)	3/4" ply x 24 - 47 1/2
B Back Panel (1)	3/4" ply x 8 1/4 - 47 1/2
C Front/Back Edges (2)	13/16 x 1 1/2 - 47 1/2
D Ctr. Support Arms (2)	13/16 x 3 3/4 - 23 1/2
E Support Blocks (2)	13/16 x 4 3/4 x 3 11/16
F Cleats (6)	3/4 x 3/4 - 23 7/16
G Trough Bottom (1)	13/16 x 4 7/16 - 47 1/2
H Wire Trough Lip (1)	13/16 x 3 x 47 1/2
LEGS	
I Feet /Arms (4)*	1 5/8 x 5 1/4 - 25 1/8
J Uprights (2)*	1 5/8 x 5 1/4 - 26 1/2
K Mounting blocks (2)*	1 5/8 x 2 - 3 11/16
DRAWERS	
L Drawer Guides (6)	7/16 x 3/4 - 23
M Drawer Sides (6)	13/16 x 2 15/16 - 25
N Center Dr. Front (1)	13/16 x 2 15/16 - 25
O Center Dr. Back (1)	13/16 x 2 3/8 - 21 5/8
P Ctr. Support Strip(1)	13/16 x 2 - 22 1/8
Q Outer Dr. Fronts (2)	13/16 x 3 - 11 1/8
R Outer Dr. Backs (2)	13/16 x 2 3/8 - 9 1/2
S Center Dr. Bottom (1)	1/4" ply x 16 - 22 1/8
T Outer Dr. Bottoms (2)	1/4" ply x 10 - 20
U Mouse Platform (1)	1/4" ply x 10 - 10

*Glue up from two pieces 4/4 (13/16") stock.

CUTTING DIAGRAM

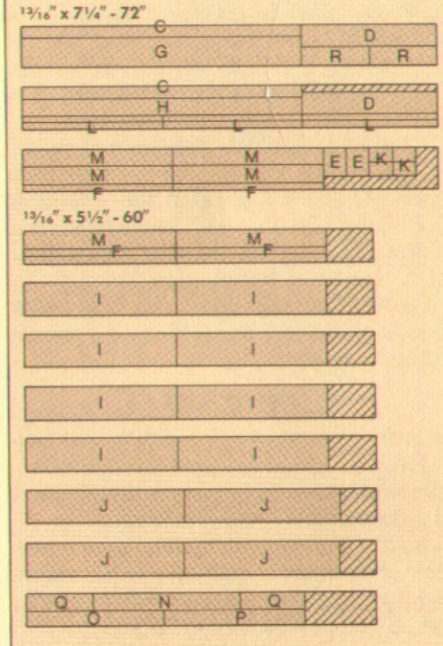

Also need: 48" x 48" sheet of 3/4" plywood
24" x 48" sheet of 1/4" plywood

Printer Stand

FOR THE OUTPUT OF YOUR INPUT

A paperless office is one promise the computer didn't quite keep. If anything, it just made it easier and faster to print even more letters, documents, and sheets full of numbers nobody understands.

The fact is, a printer has become an essential addition to any computer. So, I decided to build a printer stand to match my new computer desk.

This printer stand stores fan-fold computer paper in a drawer under the top, and it has a special shelf in the back to restack the paper as it comes out. It also has a lower shelf for storing reference books.

TOP AND BASE SHELF

I started by building the top (A) and lower shelf (B) for the stand. To begin, cut both pieces 23" long out of ¾" plywood.

Then cut the top (A) 14 15/16" wide and the base shelf (B) 15⅜" wide. (The top is narrower to allow for the hinge and back shelf which are added later.)

EDGING PIECES. Next, rip three edging pieces from 4/4 solid stock. These pieces are a 1½"-wide top front strip (C), 3⅛"-wide base front (D), and a 7"-wide base back (E), see Fig. 1. All pieces are 23" long.

JOINTS. These three edging pieces are joined to the plywood top (A) and base shelf (B) with tongue and groove joints. To make these joints, begin by ploughing a ¼" x ¼" groove on a test piece.

TONGUES. Then cut rabbets on the two plywood pieces to produce tongues to fit the groove in the test piece. Note: On the top, there's a tongue on the front edge only. The back edge remains square. The base shelf has tongues on both edges.

GROOVES. Now the grooves can be cut on the edging pieces. On the two front pieces (C and D), position the groove so the edging sticks up 1/32" from the surface of the plywood. (It will be planed flush later. See Shop Notes, page 23.)

On the base back piece (E), the groove is located directly across from the groove in the base front (D).

PAPER SLOT

In order to be useful, the top has to have a slot so the paper can feed up from below. The location for this slot depends on where the slot on your printer is located.

SLOT POSITION. To position the slot, place the printer on the top so it's centered front to back and sideways. Then, mark a line to indicate the center of the printer's paper feed slot. Measure out 1¼" on both sides of this line to lay out a 2½"-wide slot, see Fig. 1.

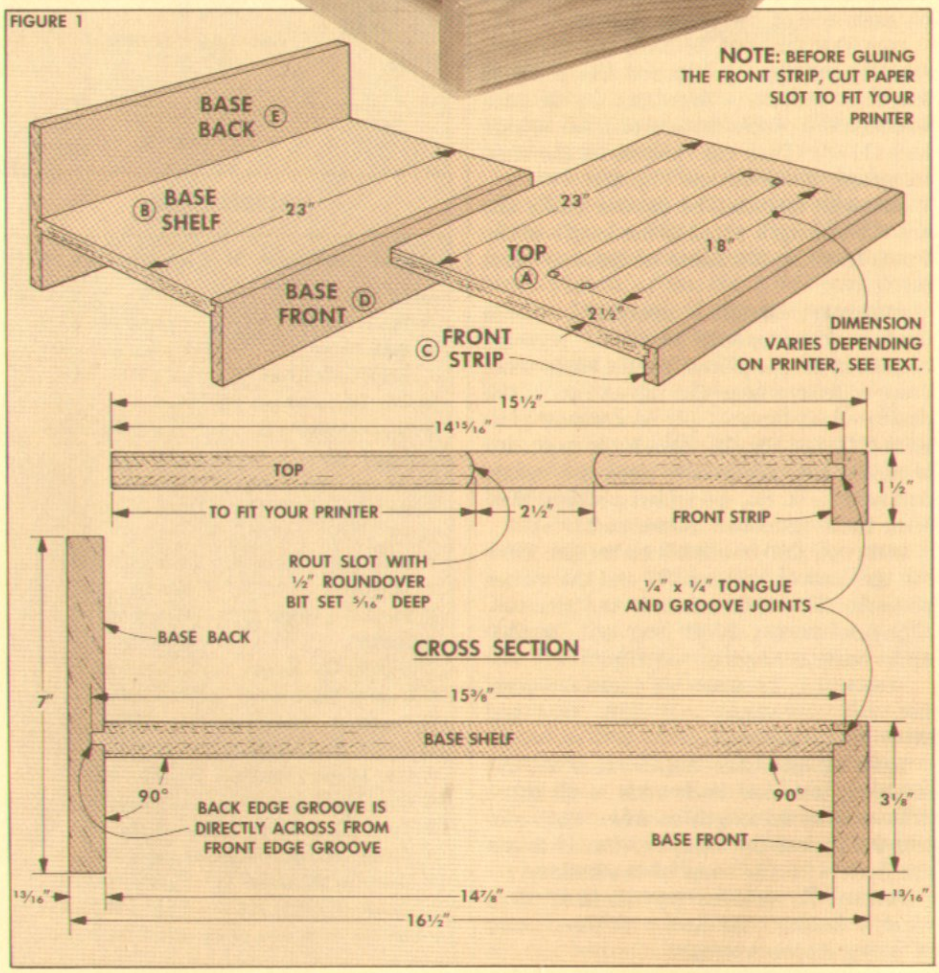

SLOT LENGTH. The length of the slot depends on the paper width. For an 80-column printer (9½"-wide paper), make the slot 12" long. For a 132-column printer (15⅞"-wide paper), the slot is 18" long.

SLOT CUTTING. To cut the slot, I bored ½"-dia. holes at the four corners and cut out the opening with a saber saw. Then round over the edges to a bullnose profile with a ½" roundover bit set to cut 5/16" deep, see Fig. 1.

ASSEMBLY. After the slot is cut, the three edge pieces (C, D, E) can be glued to the edges of the top and base shelf.

CLEATS

The assembled top and base shelf are fastened to the legs with cleats.

TOP CLEATS. To make the cleats (F), rip two pieces ¾" square, and cut them to length to fit between the front edging strip and the back edge of the top, see Fig. 2. Then drill 5/32"-dia. shank holes through two sides of the cleats, offsetting the holes ⅜" so they don't run into each other.

BOTTOM CLEATS. The bottom cleats (G) are ripped to 2⅜" wide. These are mounted to the base shelf by pre-drilling two counterbored holes for 2¼" screws, see Detail in Fig. 3. Also, pre-drill six shank holes that are used later to mount the cleats to the legs, see Fig. 2.

FASTEN CLEATS. After the shank holes are drilled, drill pilot holes in the top and base shelf. Position these pilot holes so the cleat is 1/16" in from the edges, see Detail in Fig. 3. (This offset ensures that the edges of the top and base will be drawn tight against the legs.)

CORNER BLOCKS. After fastening the bottom cleats, I glued in corner blocks (H) to secure the cleats (G) to the front and back edge pieces, see Fig. 3.

LEG ASSEMBLIES

To complete the basic stand, two C-shaped leg assemblies are made, see Fig. 4

MORTISES. Before the arms and feet (I) can be glued together, recesses are cut on the inside faces to form mortises. (For more on this, see page 12.) After the recesses are cut, glue the pieces together to form the two arms and feet.

ANGLE CUT. To complete the arms and feet, cut a taper off the top edge of the feet and the bottom edge of the arms. To do this, I used a shopmade taper jig, see Fig. 5. (Also see Shop Notes, page 23.)

TENONS. Next, glue up the pieces for the uprights (J), and cut tenons on the ends to fit the mortises.

ASSEMBLY. Now glue the uprights into the arms and feet. When the glue dries, use a ⅜" round-over bit to round over the *inside* edge of the upright and the *inside* top edge of the foot. (Rout these edges now. You can't get a router in there after the printer stand is assembled.)

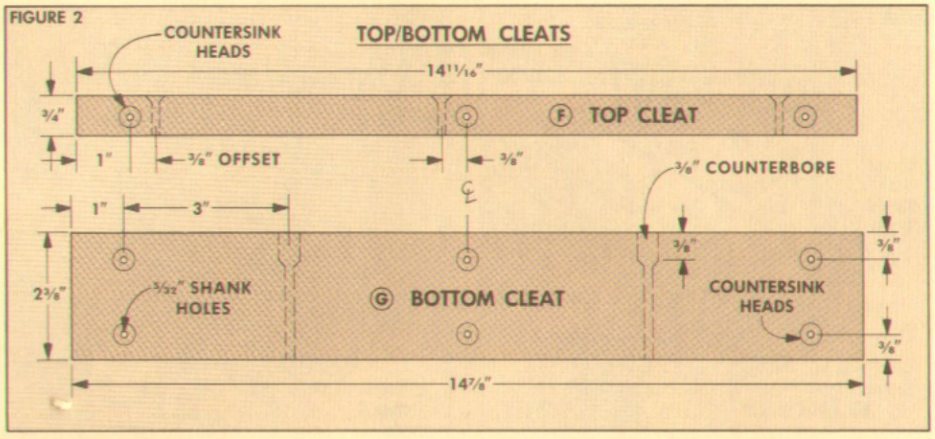

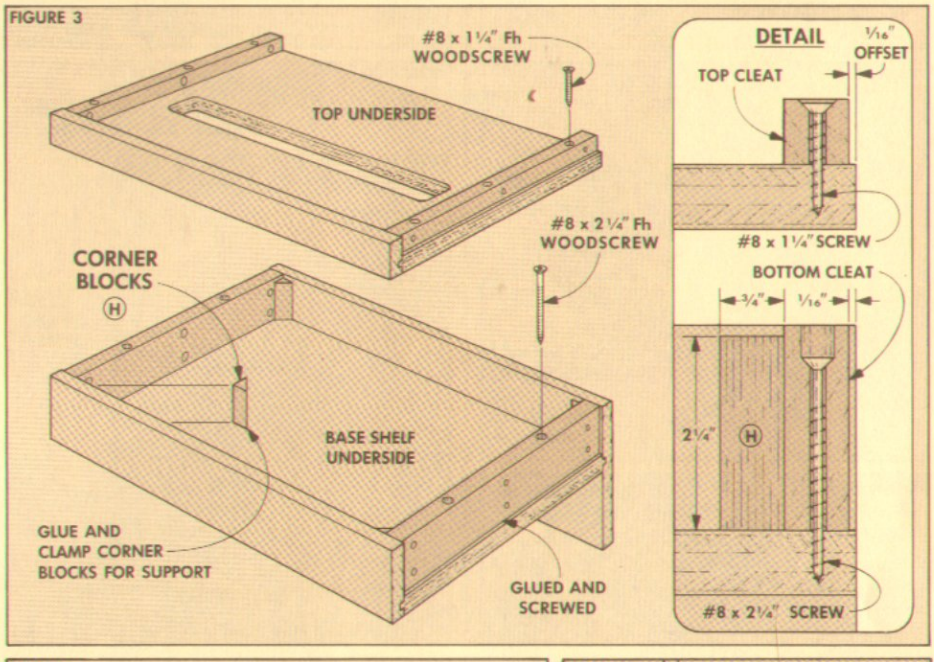

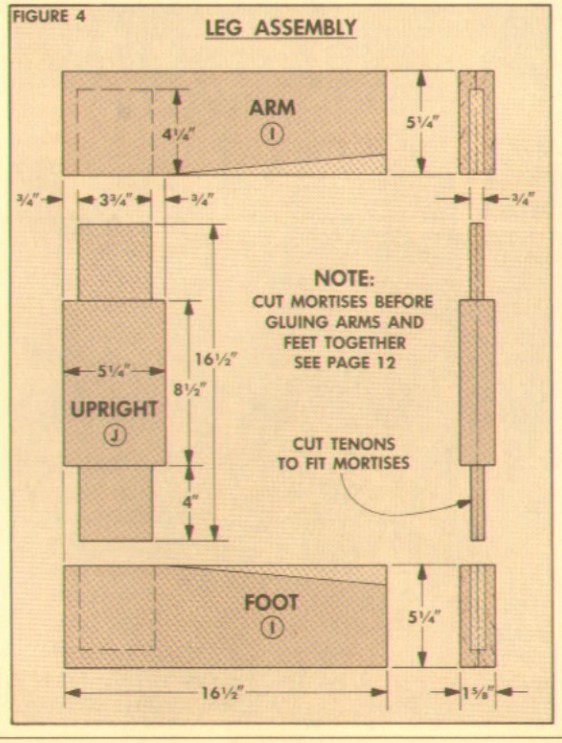

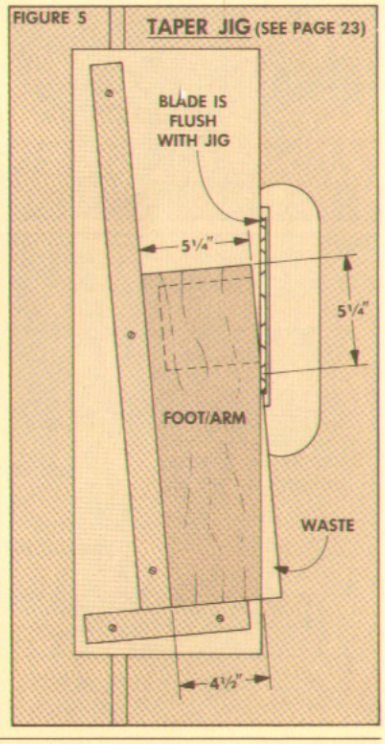

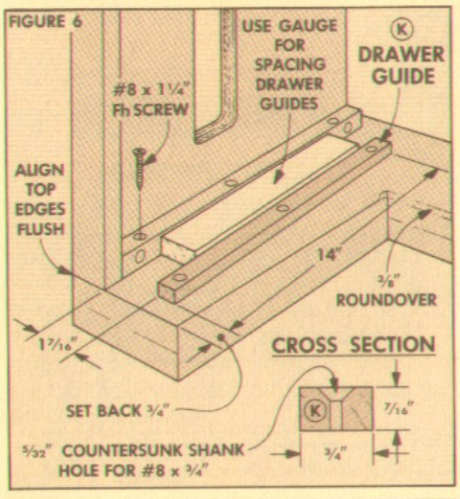

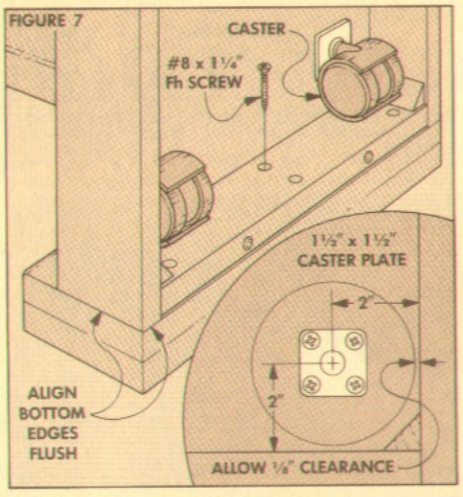

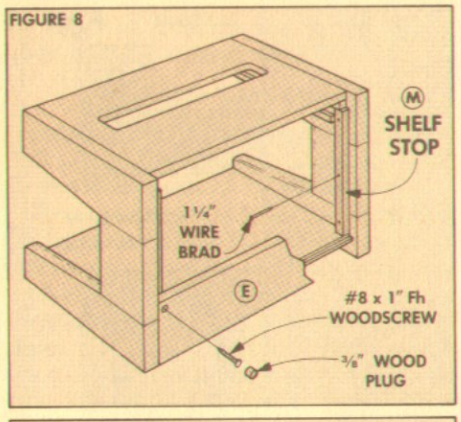

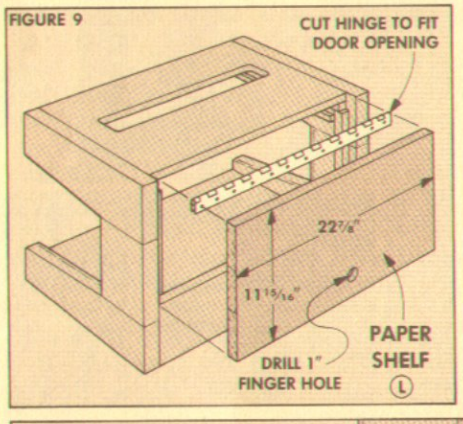

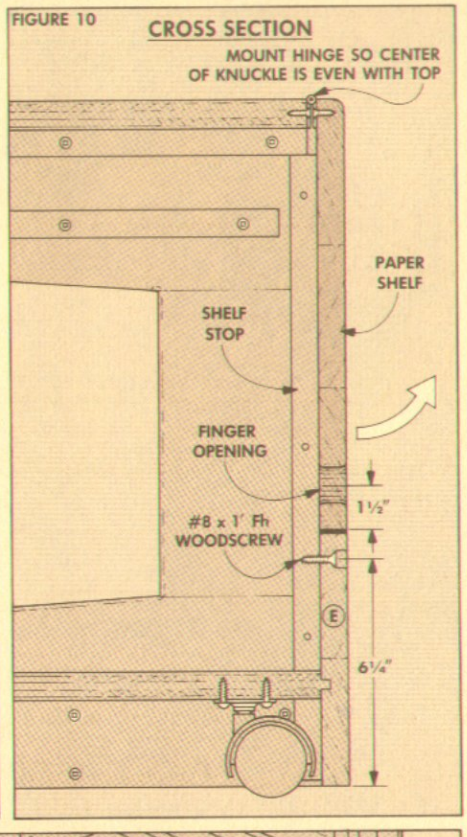

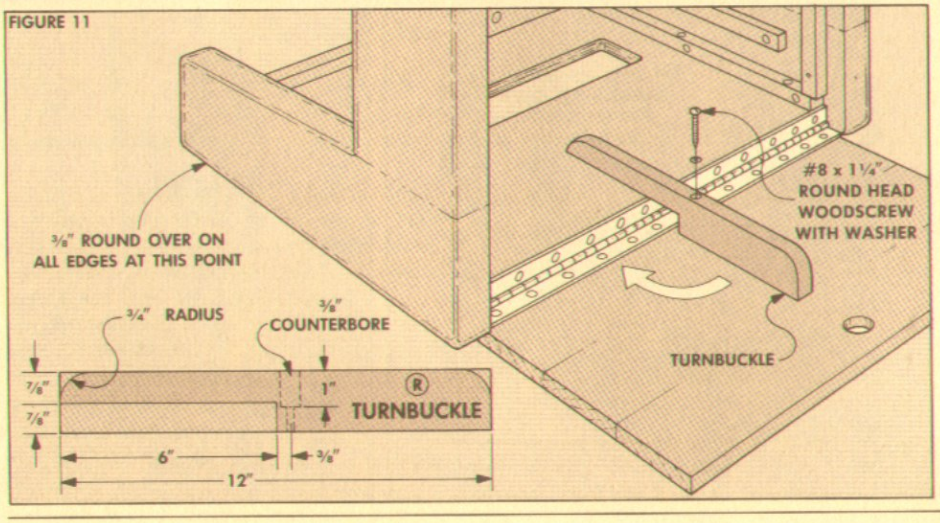

ASSEMBLE STAND

To assemble the stand, I began by fastening the top assembly to one of the C-shaped legs. To do this, lay the leg down and position the top assembly on it.

ATTACH TOP. As the top is put into position, make sure the top surface is flush with the top edge of the leg, and that the front edges of the top and the legs are aligned. Then mark pilot holes through the shank holes in the cleats, drill the holes, and screw the top down tight, see Fig. 6.

ATTACH BASE. Now the base shelf can be positioned on the bottom part of the same leg assembly. Align the front and bottom edge of the shelf with the edges of the foot, see Fig. 7. Then screw it in place.

ATTACH SECOND LEG. After the top and base assemblies are screwed to one of the legs, flip this assembly over and fasten it to the other leg.

ADD CASTERS. Now the casters can be mounted to the bottom of the base shelf. Center them so there's ⅛" clearance when they rotate, see Detail in Fig. 7.

DRAWER GUIDES. To complete the basic assembly, I cut two drawer guides (K) ¾" wide by 7/16" thick and pre-drilled three countersunk shank holes for No. 8 x ¾" screws, see Fig. 6.

SPACING GAUGE. The guides are screwed to the inside faces of the legs. To position the guide, I made a spacing gauge by ripping a piece of scrap 1 7/16" wide. Use this gauge to position the guide, and mark pilot holes through the shank holes in the guides, see Fig. 6.

PAPER CATCHER

One of the nicest features on this stand is the paper shelf (L). This shelf swings up to catch and stack the fan-fold paper as it feeds out, refer to Fig. 13.

SHELF STOCK. I made the shelf by edge-gluing 4/4 stock to get a blank 23½" by 12½". This blank is trimmed to final length to fit between the legs with 1/16" clearance on each end (22⅞" in my case). The width of the blank equals the distance from the top of the base back (E) to the top of the top surface, less 1/16" for clearance (11 15/16" in my case), see Fig. 10.

FINGER OPENING. After cutting the shelf to size, bore a 1"-dia. finger hole centered 1½" up from the bottom edge, see Figs. 9 and 10.

INSTALL HINGE. The shelf is mounted to the top with a piano hinge, see Fig. 9. Begin by cutting the hinge to fit between the legs. Then hold it in place against the back edge of the top so the center of the knuckle is aligned with the top edge and mark the pilot holes, see Fig. 10.

Next, hold the hinge so the knuckle is centered on the edge of the paper shelf and mark these pilot holes. Now, drill all the pilot holes and mount the hinge.

SHELF STOPS. To keep the shelf from swinging in and straining the hinge, I fastened vertical shelf stops (M) to the inside faces of the legs, see Fig. 8.

Cut two stops ¾" x ¾" and pre-drill holes for the wire brads that hold them in place. To position the stops, let the paper shelf hang straight down. Then nail the stops so they're flush against the paper shelf and the base back (E), see Fig. 10.

SECURE BASE BACK. After the stops are in place, I secured the base back (E) to them. Drill a counerbored hole for a No. 8 x 1" screw and then screw the base back to the stop, see Fig. 8.

TURNBUCKLE. Now all the paper shelf needs is something to hold it up. We found that a turnbuckle (R) made from a 1¾" x 12" piece of 4/4 stock was the sensible means of support, see Fig. 11.

To make the turnbuckle, cut a workpiece 1¾" wide by 12" long. Then drill a counterbored shank hole centered on the length. (This is for the screw the turnbuckle pivots on, see Detail in Fig. 11.)

NOTCH. Next, cut a 6"-long by ⅞"-deep notch off one-half the length. This notch compensates for the different levels of the surfaces of the top and paper shelf, see Fig. 11.

MOUNT TURNBUCKLE. To mount the turnbuckle, turn the stand upside down and screw the turnbuckle into the paper shelf.

PAPER DRAWER

To complete the stand, I added a drawer to hold the fan-fold paper. This drawer is sized to hold 300 to 400 sheets of fan-fold paper. There's also enough room for several extra printer ribbon cartridges.

CUT TO SIZE. The front, back, and sides of the drawer are cut from 4/4 stock. First, rip the front (N) and sides (P) 2 15/16" wide. This width should equal the distance from the bottom of the front edging strip down to the front corner of the leg, less 1/16" for clearance, see Fig. 13. Then rip the back (O) only 2¼" wide to allow space for the turnbuckle, see Fig. 12.

RABBETS. To join the front to the sides, I cut a rabbet on both ends of the front, see Detail in Fig. 12. The back is butted between the sides and screwed in place.

GROOVES. To mount the plywood drawer bottom (Q), cut a ¼"-deep groove to fit the plywood bottom near the bottom edge of all the pieces, see Side View.

Then, to mount the drawer on the guides, plough a ⅜"-deep by 13/16"-wide runner groove 1 7/16" down from the top edge of each drawer side. Now slip in the plywood bottom and screw the drawer together.

FINISHING. The last step is to round over all edges of the stand (except those around the drawer and the drawer front itself) with a ⅜" round-over bit. Then I finished the printer stand with polyurethane.

FIGURE 12

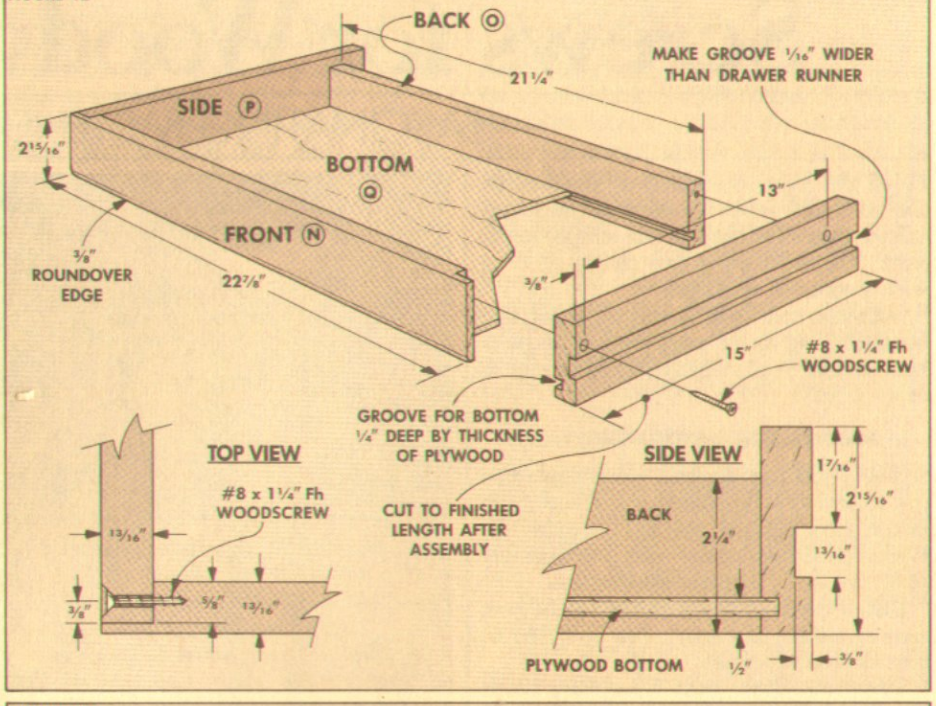

FIGURE 13

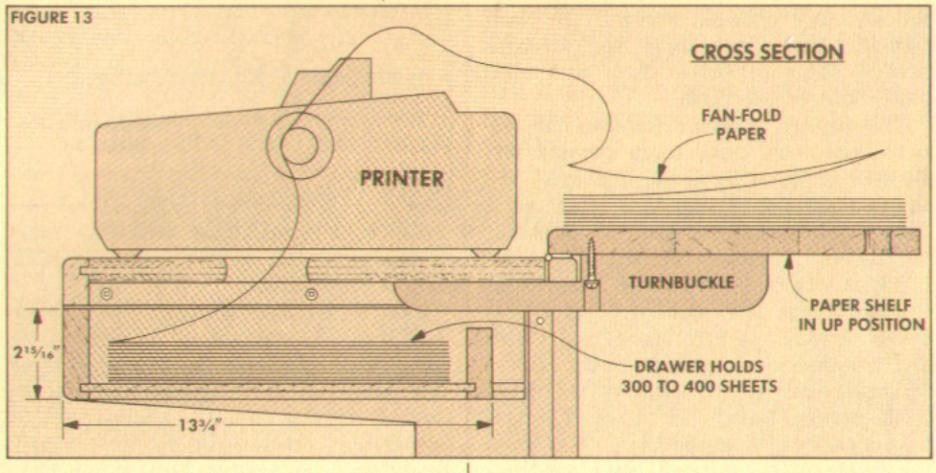

MATERIALS LIST

Overall Dimensions: 26¼"w x 16½"d x19"h

A TOP (1)	¾ ply 14 15/16 x 23
B BASE SHELF (1)	¾ ply 15⅜ x 23
C TOP FRONT (1)	13/16 x 1½ - 23
D BASE FRONT (1)	13/16 x 3⅛ - 23
E BASE BACK (1) *	13/16 x 7 - 23
F TOP CLEATS (2)	¾ x ¾ - 14 11/16
G BOTTOM CLEATS (2)	¾ x 2⅜ - 14⅞
H CORNER BLOCKS (4)	¾ x ¾ - 2¼
I FEET/ARMS (4) **	1⅝ x 5¼ - 16½
J LEG UPRIGHTS (2)	1⅝ x 5¼ - 16½
K DRAWER GUIDES (2)	7/16 x ¾ - 14
L PAPER SHELF(1) *	13/16 x 11 15/16 - 22⅞
M SHELF CLEATS (2)	¾ x ¾ - 14⅜
N DRAWER FRONT (1)	13/16 x 2 15/16 - 22⅞
O DRAWER BACK (1)	13/16 x 2¼ - 21¼
P DRAWER SIDES (2)	13/16 x 2 15/16 - 15 R
Q DRAWER BOTTOM (1)	¼ ply 12¾ x 21¾
R TURNBUCKLE (1)	13/16 x 1¾ - 12

* EDGE GLUED FROM THREE PIECES
** MORTISE BEFORE GLUING

CUTTING DIAGRAM

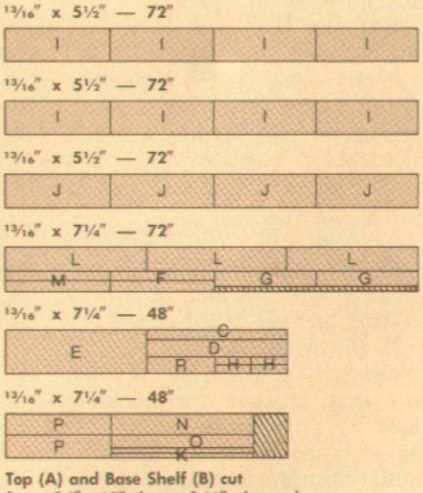

Top (A) and Base Shelf (B) cut from 24" x 48" sheet of ¾" plywood

Drawer bottom (Q) cut from 24" x 24" sheet of ¼" plywood

Screws for Woodworking

FASCINATING FASTENERS

Of all the joints discussed in *Woodsmith*, the one that's probably used the most and talked about the least is the simple screw joint. That is, joining two pieces of wood with a common woodscrew.

Although this joint is simple, lately I've been thinking about what kind of screw is best to use. And, what's the best way to drive it in?

SCREWS FOR WOODWORKING

A few years ago drywall screws grabbed the attention of woodworkers. They go in faster, hold tighter, and don't require the typical pilot hole, shank hole, and countersink needed by regular woodscrews.

But drywall screws may not be the best answer either. Recently, I've switched to *particle board screws*.

HEAT-TREATED. Both particle board screws and drywall screws are heat treated. This gives them the strength needed to power-drive them into steel studs with no pilot hole.

This feature attracted woodworkers because you could drive them straight into hardwoods (even with no pilot hole) and they wouldn't break or twist apart. (Although this process is fast, it's probably not the best procedure. More on this later.)

HEAD SHAPE. Apart from being heat-treated, there are some differences between drywall, particle board, and standard woodscrews. Drywall screws have a trumpet-shape on the back of the head, while particle board and standard screws have a sharper V-shaped head. (The trumpet shape lets the drywall screw head pull down slightly below the surface without tearing the drywall paper.)

THREADS. The most important difference between these screws is the thread angle and shape. Typical particle board and drywall screws have threads that climb up the shaft at a steeper lead angle (20°) than on standard woodscrews (15°), see the drawing above. This means you can drive them in quicker.

For example, a 1¼"-long standard woodscrew takes about 15 full revolutions of a screwdriver to drive it in flush. But a 1¼"-long particle board screw only takes about 10 revolutions.

Some particle board and drywall screws have even steeper threads (25-30°) for faster driving (trade-named "Kwixin"). They may also have two separate threads (called a double lead) that climb up the shaft like the red and white stripes on a barber pole. (This is shown on the drywall screw in the drawing above.) Since a double-lead thread has twice as many threads, it tends to hold better, particularly in softwoods.

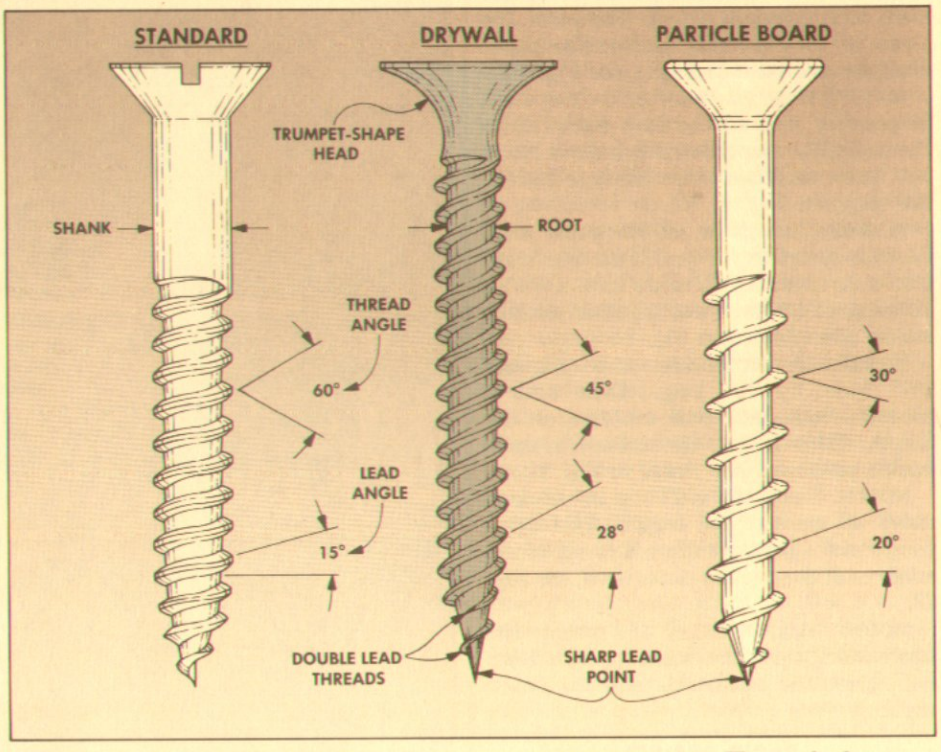

PARTICLE BOARD SCREWS. More important than the number of threads is the depth of the threads. The thread of a particle board screw is deeper and sharper than a drywall screw. Commercially, a deep-thread screw is called a "Lo-Root" screw since the center shaft between the threads (the "root" of the screw) is much thinner.

This produces deeper, sharper threads that slice their way into the wood. (They have a smaller "thread" angle, see drawing above.) Once the screw is in place, the deep threads hold tight.

CONCLUSION. Although I'm not ready to give up the old slot-head woodscrew, I have been using particle board screws more often. And recently I've gotten very interested in the Robertson square-drive version, see box on the next page. (I used Robertson screws on the computer desk and printer stand shown in this issue.)

MECHANICS OF A SCREW JOINT

No matter what screw is used, you should drill at least two holes — a shank hole and a pilot hole — to drive it into the wood. However, before drilling any holes, something needs to be said about the mechanics of a screw joint.

CLAMPING ACTION. The goal of a screw joint is to pull the front piece of wood tightly down to the back (anchor) piece. The key to this is that you're not really screwing *into* both pieces of wood. The threads of the screw grip *only* the anchor piece. The front piece is simply held tight by the screw head — in effect, a clamping action takes place.

GLUE JOINT. This mechanical action is even more critical when glue is applied to the joint (as is the case most of the time in woodworking). The screw actually serves as a spot clamp to pull the two pieces of wood tightly together until the glue dries.

MECHANICAL ACTION. This is where it's easy to get into trouble. In order for the mechanical action of this joint to work properly, the screw threads should *not* grab the front piece; they should only grab the anchor (second) piece.

If the shank hole isn't deep enough (or there's no shank hole at all), the threads will "catch" in the front board. Then as the screw enters the second (anchor) board, the threads will maintain any gap that exists between the boards — and you lose the clamping action of the screw.

Even if the two boards are held or clamped together, the screw can only hold them in that position. It can't pull the front piece down any tighter without stripping the threads.

I'm sure this has happened to all of us. You try to screw two boards together, but they won't pull tight. So you push down hard and give it an extra twist. All this does is make your arm tired, and frequently strips out the threads or breaks the screw.

The problem is that the threads have gripped the front board and are maintaining the gap between the boards.

DRILLING THE SHANK HOLE

When drilling the shank hole, it has to be deep enough for the shaft of the screw *and* any threads that will be in the front piece. The most common mistake in drilling the shank hole is to drill it only for the shank (unthreaded) portion of the screw. It has to be deep enough for any threaded portion, too.

That is, the shank hole has to go all the way through the front board, see drawing to the right.

In most cases, you want the shank hole to be the same size as the widest diameter of the shank or the threads so the screw fits tight against the walls of the hole. (On Lo-Root screws the threads stick out slightly beyond the shank.)

This tight fit prevents the screw from "racking" or bending in the hole so the top piece can't shift in relation to the bottom piece.

However, in some situations, you *want* the pieces to be able to move independently. For example, when joining a solid-wood top to a cabinet, you want the top to be able to expand and contract with changes in humidity. In this case, the shank holes are drilled oversize to allow for this movement.

DRILLING THE PILOT HOLE

After the shank hole is drilled, a smaller pilot hole can be drilled in the back piece to anchor the threads of the screw and prevent the wood from splitting.

To mark the location of the pilot hole, the usual practice is to hold or clamp the front piece in the correct position over the back piece. Then an awl is slipped through the shank hole to mark the centerpoint of the pilot hole.

This can be troublesome because the awl may not be exactly centered in the shank hole, or it may slide off center because it hits a hard part of the grain.

To get a more precise location for the pilot hole, I use the following method. First, use a brad point bit to drill the shank hole. Then hold the second board in place. Now, with the brad point bit in the shank hole, just give it a little tap or twist, so the point of the bit marks the precise centerpoint for the pilot hole.

DIAMETER OF PILOT HOLE. The pilot hole should be about the same size or a hair smaller than the root diameter of the screw. One trial and error method to determine the right drill bit is to hold bits up in front of the screw until you find one that allows the root to just barely show on both sides of the bit.

DEPTH OF PILOT HOLE. How deep should you drill the pilot hole? That depends on the type of wood you're screwing into.

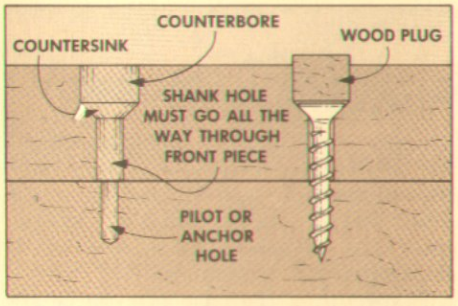

In softwood, I usually drill the pilot hole only half the length that the screw will be into the anchor piece. That's all that's necessary to keep it from splitting.

Hardwood is more likely to split, so I drill the pilot hole to the depth where the screw begins to taper to a point (about two threads short of the end.)

COUNTERSINKS/COUNTERBORES

The pilot hole and shank hole take care of the mechanics of the screw joint, but the final appearance is determined by a countersink or counterbore.

COUNTERSINKING. If you want the screw head flush with the surface, it has to be countersunk. To determine the correct diameter (depth) to drill the countersink, turn the screw upside down and fit the head into the countersink. The screw will be flush with the surface when the head just fits into the countersink.

In softwood, the diameter of the countersink (on the surface) can be a little smaller than the diameter of the screw head since softwood will compress as the screw is tightened down. On hardwood, the countersink should be almost the size of the screw head.

COUNTERBORE. If you want the screw head *below* the surface so it can be covered with a plug or putty, you have to drill a counterbore. I use a brad point bit to drill the counterbore *before* drilling the shank hole. Then the shank hole can be centered in the point left at the bottom of the counterbore.

PILOT BIT SETS. All of this drilling requires three bits: one for the counterbore or countersink, one for the shank hole, and one for the pilot hole. Or you can save time and do it all with a pilot bit set. On the next page, we've taken a look at some of the most common pilot bit sets on the market.

SQUARE-DRIVE SCREWS

The year was 1900 when Peter Robertson (a Canadian tool salesman) cut his hand with a screwdriver while he was driving in a standard slot-head woodscrew. This mishap was the beginning of a new type of screw.

After experimenting with several new designs, in 1907 Robertson patented a screw with a slightly tapered, square hole in the head. To drive it in, he used an odd-looking screwdriver with a small square head that fit snugly in the hole.

Robertson launched his company by advertising that his screws "positively cannot slip and cut the fingers or disfigure costly furniture or wood."

Although they've been popular for years in his native Canada, Robertson's screws have never caught on in the U.S. That's unfortunate because there are a number of advantages to square drive screws.

CAM OUT. One of the most aggravating things about working with standard woodscrews is "cam out." Both slotted and Phillips head screws often strip out (cam out) just as you're tightening them down snug. However, with Robertson screws, it's almost impossible for the screwdriver to cam out of the square recess.

Another characteristic I like is that the screw stays on the end of the screwdriver as though it's magnetized. You can turn it upside down and it won't fall off. That's great for tight spots.

DRIVERS. Although you need a special square-head screwdriver, one size fits No. 6, 8, and 10 square-drive screws. (All use a No. 2 driver).

LO-ROOT. In addition to the square drive design, Robertson screws are also available Lo-Root (like particle board screws). This combination of square drive and Lo-Root make them ideal for woodworking, see Sources, page 24.

RECEX. If there's a problem, I guess it would have to be: Will square drive screwdrivers still be available 25 years from now when the project needs to be repaired?

That problem has been solved already. A variation of the Robertson square drive, called a "Recex," has been developed. It has a square recess for driving with a square driver. But it also has the "star" pattern of a Phillips head so it can be removed with a Phillips drive.

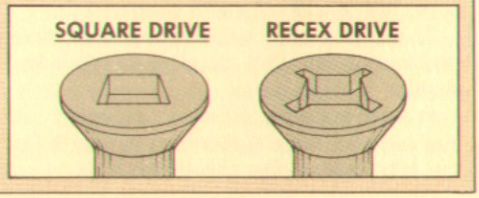

Tools of the Trade

PILOT BIT SETS

There are pilot bits that do everything — drill the pilot hole, shank hole, and countersink or counterbore — all at once. Here's our evaluation of six of the most popular pilot bit sets on the market.

FLAT BIT SETS. One of the cheapest bits looks like a modified spade bit. It has a round shaft to fit in the drill, but then flattens out to the profile of a screw.

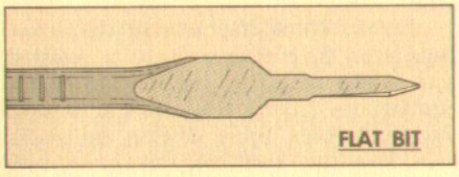

I've had a Sears 12-piece set for a number of years and though I've broken two bits, I still occasionally use the bits that are left. (Flat bits are only sold in sets, so if you break a bit, you can't replace just that bit.)

On the plus side, these bits don't have to be adjusted, they cut quickly, and leave a surprisingly clean hole. And they're easy to sharpen.

The biggest problem with these bits is the length of the shank hole. If the shank hole doesn't go all the way through the front board, the second (anchor) board won't pull up tight. (See the article about screws on pages 20 to 21.)

Unless you drill a deep counterbore with a flat bit, the shank hole won't go through a ¾"-thick board. The No. 8 x 1¼" bit, for example, drills a shank hole that's only 7/16" deep — not adequate for most work.

HALF-ROUNDS. Another type of non-adjustable pilot bit is designed especially for counterboring. (Stanley calls theirs a Screw-Sink, Vermont American's is a Screw Pilot).

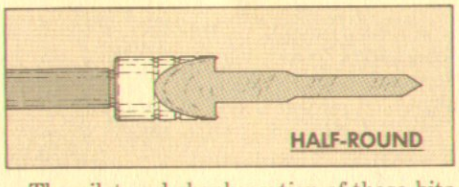

The pilot and shank portion of these bits are half-round (flat on one side) to give it better drilling action than a flat bit. The counterbore at the top of the bit has two cutting spurs. They cut a clean counterbore, but it will not cut a countersink.

These bits also suffer from the same problem of cutting a shank hole that's too shallow in most cases.

SCREWDIGGERS. Another category of bits includes those that adjust in length for the pilot hole and/or the shank hole.

One inexpensive version is called a "screwdigger" in some catalogs. These bits

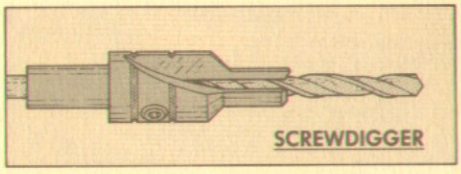

have a standard twist bit that fits into a collar. The bit cuts the pilot hole while the collar cuts the shank hole as well as the countersink and counterbore.

The length of the pilot hole can be adjusted for different length screws by loosening a small set screw. But the shank hole remains constant (very short).

Since the bit is a standard twist bit, it cuts smoothly and it can be easily replaced. For the price (under $10 for a set of four), screwdiggers aren't too bad. But there are problems: the bits often slip up the collar if the set screw isn't extremely tight. Also, sawdust tends to clog up in the flutes of the bit and in the collar itself.

ADJUSTABLE SCRU-DRILL. When I first saw a Stanley Adjustable Screw-Mate, I thought I had finally found the perfect pilot bit. (This bit is actually a "Scru-Drill" made by Disstim for Stanley and Black & Decker.)

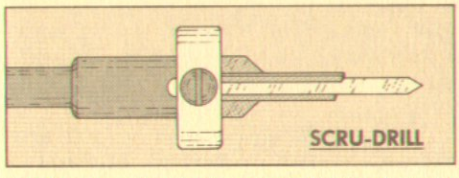

The nice thing about this bit is that the pilot bit is adjustable in length and the shank section is also adjustable to almost an inch long. A great idea — however, when I used the bit, I was disappointed.

The first problem is getting all these sections lined up and tightened down (especially if they're all jammed with sawdust). When you start to drill, the pilot appears to wobble since it's a half-round. It's difficult to see exactly where you're drilling.

Perhaps the most frustrating part is that the pilot bit section is so thin that it bends or breaks easily. And you can't buy this section of the bit separately.

But overall, it's the one bit that comes the closest to solving all the problems of drilling a pilot, shank and coutersink/bore all at once, with one bit.

TAPER BITS. The bits that have received the most attention lately are the Fuller *tapered* drills with separate countersink and stop collars.

The advantage is supposed to be that the bits are tapered "like a screw." However, woodscrews don't really taper until the last couple threads.

Since the Fuller bits taper over the entire length of the flutes, they also cut along their entire length and consequently tend to overheat very quickly. (It's best to use them at very low speeds).

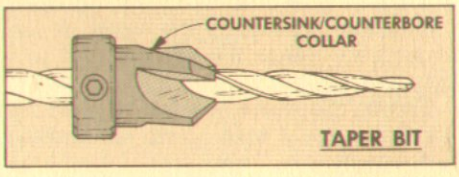

Although the taper is a nice (albeit expensive) idea, the bit by its nature is not the correct size for a pilot hole or shank hole over the depth of the hole.

EDITOR'S CHOICE

Okay, the bits described above have good and bad points. But which is the best? What I've found is that when you try to do everything at once, you run into problems. Instead, I use a two-step appproach.

First, drill the shank hole. The key here is to use a bit that drills the hole to the correct size *and* goes completely through the first board.

One of the best bits I've found for this is a brad point bit. (See Sources, page 24.) The brad point bit drills a clean shank hole. But it's also ideal because it can be used to mark the exact location of the pilot hole.

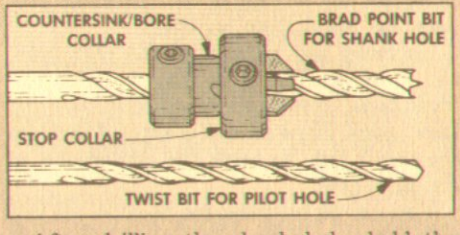

After drilling the shank hole, hold the second (anchor) board in place and slip the brad point bit into the shank hole. Then with a light tap or twist, the brad point will mark the centerpoint for the pilot hole.

By adding a countersink/counterbore collar, you can drill a countersink/bore at the same time as the shank hole.

After the shank hole is drilled, I switch to a standard twist bit to drill the pilot hole in the second (anchor) board. Although it's a separate operation, it usually yields a pilot hole that's more precisely located — exactly what's needed for a good joint.

Shop Notes

SOME TIPS FROM OUR SHOP

TRIMMING FLUSH

As we were building all of the projects in this issue, we ran into an old problem: How do you plane one surface down perfectly flush with another without disturbing the lower surface?

EDGING AROUND PLYWOOD. This was a problem on the edging strips used around the plywood top of the computer desk and printer stand. We positioned the strips so they stuck up about 1/32" above the surface of the plywood. Then they could be planed down flush. But if you plane down too far, you can cut right through the thin veneer face of the plywood.

EDGING AROUND FORMICA. It's even more of a problem on the kid's table and chairs shown on pages 4 to 9. The top frame should be perfectly flush with the Formica center. But if you plane the frame just a little too far and scratch the Formica, the surface of the Formica will look dull. (More on this later.)

FLUSH-TRIM BIT. At first I considered using a flush-trim router bit. But there isn't a wide enough surface on the computer desk to support the router. And on the kid's table, the framing strips are wider than the cutting edge on my flush-trim bit.

TWO-STEP METHOD. I settled on a two-step, hand tool method. First, I planed off a majority of the cut with a block plane, see drawing below. Then, I scraped the rest down flush with a hand scraper.

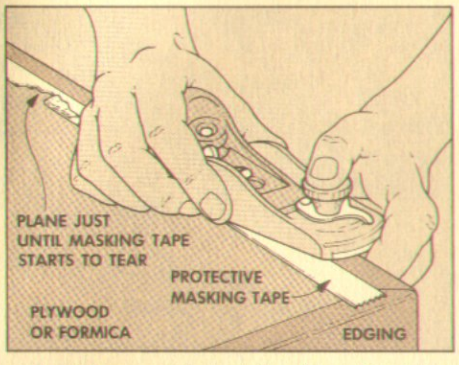

Start by running a strip of masking tape right along the joint line to protect the plywood or Formica. Then plane the edging strip down with a block plane just until the masking tape starts to tear.

USE SCRAPER. Next, remove the masking tape and use a scraper (see *Woodsmith*, No. 39) to scrape off the last little bit.

When using the scraper, position it so your index finger rides along the side of the edging strip and keeps the scraper from going into the plywood (or Formica), see drawing below.

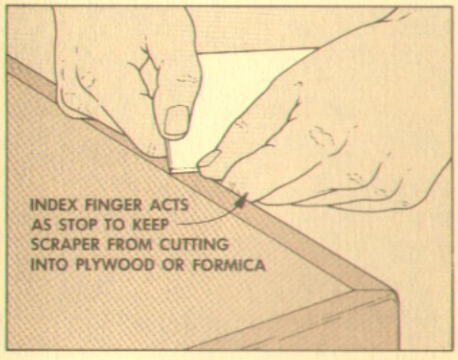

A TIP. If you should slip and scratch the Formica, rub a little polyurethane varnish over the dull spot with a Q-tip to revive the satin or glossy look.

TAPER JIG

I've had a taper jig in my shop for years. It's the kind with two arms attached with a hinge at one end. (The commercial jigs are made out of aluminum channel, but I made mine out of wood.)

When using this jig you have to perform three operations at once. First, you have to hold the workpiece tight against the jig. Then you have to hold the jig (and the workpiece) tight against the table saw rip fence. Finally, you have to push the jig forward through the saw blade while trying to keep the workpiece against the jig and the jig against the fence — not to mention your fingers out of the way of the blade.

A NEW JIG. When I made the taper cuts on the arms and feet of the computer desk and printer stand, I used a different jig. It's not as easy to change the taper angle, but it's easier (and safer) to use. That's because the jig rides in the miter gauge slot, not against the rip fence.

BASE BOARD. To build the jig, start by cutting a base board from a piece of 3/4" plywood. I cut the board a little longer than the depth of my saw and 12" wide.

Next, cut a groove on the bottom of the base board about 3" from one edge. This groove must match the width of the miter gauge slot in your table saw (usually 3/4"). Then cut a strip of hardwood to the same width as the groove, and to thickness to fit the combined depth of the miter gauge slot and the groove in the base board.

Now nail the strip in the groove. Then mount the jig on the saw, and push it through the blade to trim off the right edge, see drawing above.

The edge of the base board is trimmed like this so you know exactly where the blade will cut — right along the edge. (Note: Be sure to use the same blade that you plan to cut the taper with.)

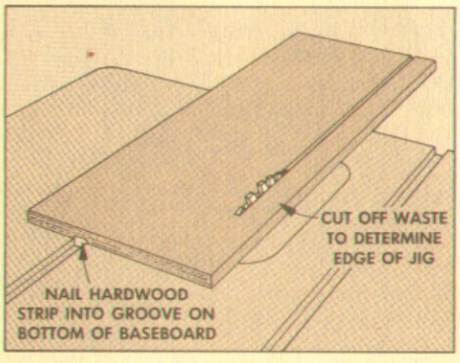

LAY OUT TAPER. Now to cut a taper using this jig, first lay out the taper on your workpiece with a pencil, see drawing below. Carry the pencil lines over and down the end and edge of the workpiece with a square.

Now place the workpiece on the jig so the pencil marks align with the edge of the base board (which is the path of the blade).

ATTACH STOPS. With the workpiece in position, I screwed down stop fences along the trailing end and left edge of the workpiece to hold it in place.

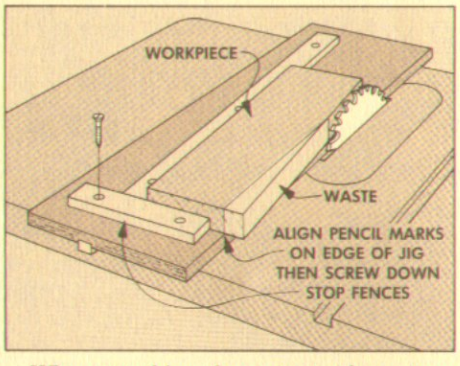

When attaching these stops, there are a couple ways to go about it. The first method is to draw around the workpiece with a pencil, remove the workpiece, and screw the stops down on the pencil lines. A better way is to temporarily clamp the workpiece to the jig and butt the stops up tight to the workpiece. Then screw them down.

USING THE JIG. To use the jig, hold the workpiece in tight against the stop fences and push the jig through the blade. It will cut the taper along the pencil line. (Note: You can make it even safer by *attaching* the workpiece to the jig with double-sided carpet tape or a quick-release clamp.)

Sources

KID'S TABLE AND CHAIRS

You can order the connector (Confirmat) screws used on the kid's table and chairs from *Woodsmith* as a kit, (see box below), or from the following source:

THE WOODWORKERS' STORE, 21801 Industrial Blvd., Rogers, MN 55374. 612-428-2199 (Catalog: $2.00). *Confirmat Screws*, 2¾"-long, Order No. D5771, $1.25 per 10 (8 are required for the table); 2"-long, Order No. D5770, $1.00 per 10 (10 are required for *each* chair).

PLASTIC LAMINATE. The table requires a piece of plastic laminate at least 26" x 26". Each chair requires a piece 9½" x 10½". I asked a local building supply store to cut a piece 30" x 48" for the table and chairs. They charged me $22.60.

COMPUTER DESK/PRINTER STAND

The hardware for the computer desk and printer stand is available from *Woodsmith*, (see box below). Or, you can probably find all of this hardware at a hardware store.

DESK. For the desk, you need a 1½" wide by 24" long (cut to fit) brass piano hinge, and four steel base glides.

PRINTER STAND. For the printer stand, you need another 1½" wide by 24" long brass piano hinge and four 2½" casters.

SQUARE-DRIVE SCREWS

In the article on screws, we talked about the advantages of using square-drive (Robertson) screws, see page 21. *Woodsmith* is offering two kits of these screws with drivers, (see box below). There are also several mail order sources:

SQUARE DRIVE SCREW CO., 5900 West 84th Street, Bloomington, MN 55438. (800-544-9460). This company will send out a sample kit that includes (24) No. 8 x 1¼" flathead, Lo-Root, zinc-plated screws with a Recex drive, and about a dozen more sample square-drive screws and a power driver bit. Order *Sample Kit - WS*, $3.00.

Other mail order sources include:

McFEELY HARDWOODS AND LUMBER, P.O. Box 3, 712 12th Street, Lynchburg, VA 24505; 800-443-7937.

TRENDLINES, INC., 375 Beacham Street, Post Office Box 6447, Chelsea, MA 02150; 800-343-3248.

THE WOODWORKERS' STORE, (see address in first column).

WOODWORKER'S SUPPLY OF N.M., 5604 Alameda, NE, Albuquerque, NM 87113; 800-645-9292.

PILOT DRILL BITS

The pilot drill bits shown on page 22 are available from local and mail order sources. *Woodsmith* is offering a special kit of our favorite bits for No. 8 and No. 6 standard and Lo-Root screws, (see box below).

WOODSMITH KITS

KID'S TABLE AND CHAIRS

Woodsmith is offering a kit of hardware for the kid's table and two chairs.

KIT #56A. Kid's Table and Chairs, $3.95. The kit includes:

- (8) 2¾" Flathead Confirmat (connector) Screws for the table.
- (20) 2" Flathead Confirmat Screws for the two chairs.

For each additional chair, add $1.25 for 10 extra screws per chair. Please specify: "EXTRA SCREWS FOR ___ CHAIRS."

COMPUTER DESK/PRINTER STAND

Woodsmith is also offering two kits of hardware for the computer desk and printer stand. (These kits do not include screws. To order screws, see kit on right.)

KIT #56B. Computer Desk Kit (for the desk only), $6.95. This kit includes:

- (1) 24" Brass Piano Hinge/Screws.
- (4) Steel Base Glides, ⅞" dia.

KIT #56C. Computer Desk and Printer Stand, $17.95. This kit includes the items in the desk kit (above), plus:

- (1 more) Piano Hinge, with screws.
- (4) Twin Wheel Casters, 2" wheels, 2½" overall height, black.

SQUARE-DRIVE SCREWS

Woodsmith is also offering two sample kits of square-drive (Robertson) screws and drivers. All of the screws are zinc-plated and heat-treated, Lo-Root particle board screws. They are flathead with a Recex drive.

KIT #56D. Square Drive Screws, $18.95. This kit includes:

- (100) of each of the following screws (total 600 screws): No. 6 x ¾", 1"; No. 8 x ¾", 1", 1¼", 1½".
- Plastic box with dividers to hold all screws listed above.
- Square-drive screwdriver.
- Square-drive power driver bit.

We are also offering a kit that includes the extra screws needed to build the computer desk and printer stand.

KIT #56E. Computer Screw Kit, $19.95. This kit includes all of the square-drive screws and drivers in the kit above, plus:

- (25 each of) No. 8 x 1¼", 2¼".

PILOT DRILL KIT

We've put together a kit of our favorite bits for drilling pilot holes, shank holes, and countersink/counterbores for No. 8 standard and Lo-Root screws. (See page 22 and the photo to the right.)

KIT #56F. Pilot Drill Kit (No. 8), $12.95. This kit includes:

- 11/64" brad point bit (for No. 8 shank holes).
- ⅜" countersink/counterbore (that fits over the 11/64" brad point bit).
- ⅜" stop collar.
- Allen wrench.
- ⅛" twist bit (for No. 8 standard screw pilot holes).
- 7/64" twist bit (for No. 8 Lo-Root screw pilot holes).

We've also put together another set that adds the bits needed for No. 6 screws.

KIT #56G. Pilot Drill Kit (No. 6 and No. 8), $23.95. This includes everything listed above (for No. 8 screws) plus all of the following bits needed to drill holes for No. 6 standard and Lo-Root screws:

- 9/64" brad point bit (for shank holes).
- ⅜" countersink/counterbore (that fits over the 9/64" brad point bit).
- 7/64" twist bit (for No. 6 standard screw pilot holes).
- 3/32" twist bit (for No. 6 Lo-Root screw pilot holes).

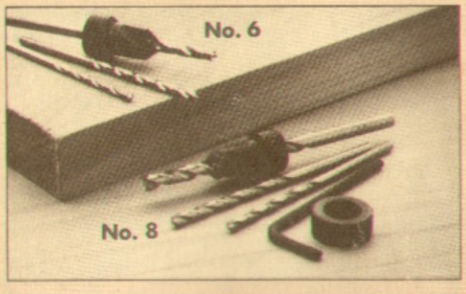

ORDERING INFORMATION

To order any of the kits, write your order and your name and address on a piece of paper. Send your order and payment (no charge cards or phone orders, please) to:

Woodsmith Kits
P.O. Box 10350
Des Moines, IA 50306.

Please specify the kit on the outside of the envelope. Allow 4-6 weeks for delivery. Postage and handling are free. (Iowa residents add 4% sales tax.) Prices good through Dec. 31, 1988.